This is a digital copy of a book that was preserved for generations on library shelves before it was carefully scanned by Google as part of a project to make the world's books discoverable online.

It has survived long enough for the copyright to expire and the book to enter the public domain. A public domain book is one that was never subject to copyright or whose legal copyright term has expired. Whether a book is in the public domain may vary country to country. Public domain books are our gateways to the past, representing a wealth of history, culture and knowledge that's often difficult to discover.

Marks, notations and other marginalia present in the original volume will appear in this file - a reminder of this book's long journey from the publisher to a library and finally to you.

Usage guidelines

Google is proud to partner with libraries to digitize public domain materials and make them widely accessible. Public domain books belong to the public and we are merely their custodians. Nevertheless, this work is expensive, so in order to keep providing this resource, we have taken steps to prevent abuse by commercial parties, including placing technical restrictions on automated querying.

We also ask that you:

+ *Make non-commercial use of the files* We designed Google Book Search for use by individuals, and we request that you use these files for personal, non-commercial purposes.
+ *Refrain from automated querying* Do not send automated queries of any sort to Google's system: If you are conducting research on machine translation, optical character recognition or other areas where access to a large amount of text is helpful, please contact us. We encourage the use of public domain materials for these purposes and may be able to help.
+ *Maintain attribution* The Google "watermark" you see on each file is essential for informing people about this project and helping them find additional materials through Google Book Search. Please do not remove it.
+ *Keep it legal* Whatever your use, remember that you are responsible for ensuring that what you are doing is legal. Do not assume that just because we believe a book is in the public domain for users in the United States, that the work is also in the public domain for users in other countries. Whether a book is still in copyright varies from country to country, and we can't offer guidance on whether any specific use of any specific book is allowed. Please do not assume that a book's appearance in Google Book Search means it can be used in any manner anywhere in the world. Copyright infringement liability can be quite severe.

About Google Book Search

Google's mission is to organize the world's information and to make it universally accessible and useful. Google Book Search helps readers discover the world's books while helping authors and publishers reach new audiences. You can search through the full text of this book on the web at `http://books.google.com/`

VDA
Society

VDA
Society

SOCIETY OF ENGINEERS.

ESTABLISHED MAY, 1854.

TRANSACTIONS FOR 1872.

EDITED BY

PERRY F. NURSEY, MEMB. SOC. ENG., SECRETARY.

PLACE OF MEETING AND OFFICES:

THE SOCIETY'S HALL, No. 6, WESTMINSTER CHAMBERS,
VICTORIA STREET, WESTMINSTER.

LONDON:
E. & F. N. SPON, 48, CHARING CROSS.
NEW YORK:
446, BROOME STREET.
1874.

PREMIUMS FOR 1872.

At a Meeting of the Society, held on February 3rd, 1873, Premiums of Books were awarded to:—

EUGENE G. BARTHOLOMEW, for his Papers "On Electric Telegraphy."

WILLIAM H. FOX, for his Paper "On Continuous Railway Brakes."

HENRY DAVEY, for his Paper "On Milford Haven and its New Pier Works."

CONTENTS.

	PAGE
Inaugural Address of the President	1
Examples of Recent Practice in American Locomotive Engineering. By Vaughan Pendred	19
State Railways and Railway Amalgamation. By George Spencer	43
Electric Telegraph Instruments. By Eugene G. Bartholomew	53
Electrical Batteries. By Eugene G. Bartholomew	77
Milford Haven and its New Pier Works. By Henry Davey ..	89
Continuous Railway Brakes. By William H. Fox	112

SOCIETY OF ENGINEERS.

ESTABLISHED MAY, 1854.

COUNCIL AND OFFICERS FOR 1873.

Council.

President.—JABEZ CHURCH.

Vice-Presidents.—J. H. ADAMS. W. MACGEORGE. V. PENDRED.

E. G. BARTHOLOMEW.
JOSEPH BERNAYS.
THOMAS CARGILL.
FREDERICK COLYER.
ARTHUR RIGG.
G. W. STEVENSON.
ROBERT P. SPICE.
GEORGE WALLER.

Members of Council, ex-officio.

Past President and Trustee.—HENRY PALFREY STEPHENSON.
Past President.—WILLIAM THOMAS CARRINGTON.
Past President and Trustee.—WILLIAM HENRY LE FEUVRE.
Past President and Trustee.—BALDWIN LATHAM,
Past President.—FREDERICK WILLIAM BRYANT.
Past President.—WILLIAM ADAMS.
Hon. Secretary, Treasurer, and Trustee.—ALFRED WILLIAMS.

Auditor.—JOHN WALKER.
Secretary.—PERRY FAIRFAX NURSEY.
Bankers.—MESSRS. BARNETTS, HOARES, HANBURYS, & LLOYD.
Hon. Solicitors.—MESSRS. WILKINS, BLYTH, & MARSLAND.

PLACE OF MEETING AND OFFICES:

SOCIETY'S HALL, 6, WESTMINSTER CHAMBERS,
VICTORIA STREET, S.W.

1874.

TRANSACTIONS, &c.

February 5th, 1872.

INAUGURAL ADDRESS.

By JABEZ CHURCH, President.

In addressing you for the first time as President of the Society of Engineers, allow me to preface my inaugural address by an expression of the high sense I entertain of the compliment done me in electing me to this position. Regarding the Society, as I do, as one of which its members have every reason to be proud, it follows that I esteem an election to its Chair as a very distinguished honour, and of that honour I shall hope to show myself sensible, not alone in words but in practice, by discharging the duties of the Presidency to the best of my ability, and neglecting no opportunity of promoting the Society's growth and interests in every way. Doing this, I know I may rely on your cordial support, as well as that of our Council—a co-operation which will not only make my work lighter, but encourage me with the hope that when my term of office shall have expired, it will be considered as not having been without utility, and that I was not wholly unworthy of the confidence so kindly placed in me. Gentlemen, there is one more prefatory matter before I come to the business part of my address—a matter which has given rise to an all-absorbing anxiety, now happily relieved. You will have anticipated that I am referring to the health of H.R.H. the Prince of Wales. I am persuaded no Society or body of men are more loyal to Her Majesty's Throne than we are, and that nobody can regret more than we as Engineers do that so valuable a life as that of the Prince should have been in jeopardy, and in jeopardy, above all, from the want of sanitary precautions. I am sure you all join with me in wishing for His Royal Highness's speedy recovery and restoration to health.

In reviewing the present condition of the Society, and its transactions of the past year, I must express my regret that the

number of its members has not greatly increased. When I consider, however, the depression from which the engineering profession has so long suffered (owing, without a doubt, to the past panic and the consequent paralysation of all undertakings requiring capital), I think we may fairly account for the state of things in this way. Happily, the clouds have been for some time breaking, and we may hope that, as confidence becomes gradually restored, the sun again will burst out with all its brightness, once more bringing prosperity upon a profession whose noble function it is to minister to the wants, health, convenience, and comfort of the whole civilized world.

During the past Session several important and valuable papers have been read and discussed. Among others, I would mention that of our past President, Mr. Baldwin Latham, on "The Ventilation of Sewers;" one on "The Machinery and Utensils of a Brewery," by Mr. Thomas Wilkins, to whom a premium has been awarded. Then followed an instructive paper on "The Timbering of Trenches and Tunnels applicable to Sewerage and Railway work," by Mr. Charles Turner; and one from Mr. Perry F. Nursey, on "Recent Improvements in Explosive Compounds," which was most deservedly awarded a premium. I would also mention another paper to which a premium was awarded, that of Mr. Thomas Cargill, on "Floating Breakwaters."

The Society has been privileged during the past year in making several most enjoyable and instructive excursions to various works. The first of these was to the Phœnix Paper-Mills at Dartford; then in August a visit was made to the Abbey Mills Pumping Station of the Metropolitan Main Drainage Works, and also to the extensive Telegraph Works of Mr. Henley at North Woolwich; and in September an excursion was made to the Lodge Sewage Farm at Barking; and to the Works of the Essex Reclamation and Sewage Company.

It needs no arguments of mine to show what golden opportunities are afforded by these inspections, especially to our younger members—opportunities which ought not to be lost, as they afford the means by which those members may become acquainted with the practical working of departments of the profession which possibly they as yet only understand theoretically. It may be said that all the works which are visited are not perfect. What then? No one can fail to derive some benefit and experience alike from the study of failures as of successes.

But concerning these periodical examinations, I would venture to make a suggestion—*viz.* that in connection with each of them an evening, conveniently selected, should be devoted to the reading of a brief paper upon what has been seen, and

to the discussion upon that paper. Members would have opportunities at the time of the visit of making notes for the discussion, and there would scarcely be one who, after a personal inspection of any works, would not have some comments to make, either in the way of defects to point out or merits to acknowledge and applaud. Many, again, who could not join the inspecting party would have the opportunity of gaining from the discussion information of a valuable character, which they otherwise might lose; and, lastly, our transactions would be greatly enriched by the record. This is a matter of considerable importance to the Society, and in a marked sense to those members who are unavoidably prevented from giving that frequent and regular attendance to the meetings which is so highly desirable.

On the last-named point—the attendance at our meetings—I should like to speak with some emphasis. It is vain to profess a strong regard for the interests of our Society, if we do not make a practical manifestation of it; and I would, therefore, urge upon you all that it is of the utmost importance to attend, even if it may be at some slight personal inconvenience, the meetings and excursions that take place during the year, so that every member may be ready to contribute some resulting information. It may be only a mite, yet if all do that—recollecting that "unity is strength"—it follows not only that we as an institution shall be gainers, but that very important advantages may accrue to society at large.

Concerning the writing of papers, too, I would urge that members do not refrain from reading a paper because they may not have time to write a long and elaborate treatise. Short papers are often better than long ones; they frequently lead to interesting and profitable discussions; and the more we have of these the more are our several spheres of usefulness increased.

I will now venture to draw your attention to some of the more recent events and achievements which are of interest to our profession. Highest in importance must always be considered those departments of engineering which are devoted more immediately to matters of life and health. Indeed, we must ever regard those amongst the greatest benefactors of mankind who have provided large and densely-populated communities with abundant supplies of pure and wholesome water, and at the same time ample and well-arranged drainage, thereby reducing, as they do, the death-rate, making the population of a town strong and healthy, and saving valuable lives which, had it not been for the successful efforts of the engineer, must almost inevitably have perished.

A large number of the cities and towns in this country can

now boast of water derived from the purest sources which liberal expenditure can command, and many are the works of extension that have been carried out of late to meet the wants of a rapidly-increasing population. The water supply of the metropolis has lately been the subject of legislation, the professed object of which, to use the words of the Act, is "to make further provision for securing a constant supply of pure and wholesome water." To the principle of a constant supply, it may fairly be assumed that very few disinterested opponents could now be found. The arguments in its favour are conclusive, and its superiority over the intermittent or cistern storage system is admitted by overwhelming majorities. We can, therefore, well understand how it was that the prospect of a constant supply given by the passing of the Government Bills through Parliament was welcomed by the general public; and it may almost as readily be understood why the Metropolitan Water Companies should offer strong opposition to anything but a limited interference with their long-standing privileges. The result of this contest between the companies and the public was the passing of a measure by which the former are bound to give a constant supply when duly requested by the local authorities, unless it can be shown that more than one-fifth of the premises to be thus supplied are not provided with fittings in accordance with regulations made by the companies and approved by the Board of Trade. These regulations are still under the consideration of the companies, and it is to be hoped that, when finally authorized, they will be as lenient to the consumers as the reasonable prevention of waste will allow. With regard to the latter part of the preamble of the Act, referring to the water to be supplied as "pure and wholesome," the Committee of the House of Commons which sat upon the Bill adopted the opinion of the Royal Commission on Water Supply—*viz.* that the water supplied to the metropolis from the Thames is generally good and wholesome. The important question of purity was, therefore, virtually left untouched, except in so far as that London has now water examiners, acting under the Board of Trade, whose office is permanent, and whose duties are to inquire into and report upon the grounds of complaints made against any of the companies as to the quality or quantity of the supply.

I will not upon the present occasion discuss the reasons for the conclusions at which the Royal Commission arrived concerning the water of the Thames; but I feel constrained to draw your attention to the fact, that above the point where the Thames water [illegible] ken for the use of the inhabitants of London there is a [illegible] area of more than 3600 square miles, within whose l[illegible] nd a population of 860,000 human beings. Now,

whatever may be done to secure the purity of the Thames, we have, as the result of the most recent scientific inquiries on this subject, the following announcements of the Rivers Pollution Commissioners—men whose verdict most certainly deserves attention and respect:—"That no process has yet been devised for cleansing surface-water once contaminated with sewage, so as to make it safe for drinking." And further, in reference to the self-purification of rivers:—"There is no river in the United Kingdom long enough to effect the destruction of sewage by oxydation." These are important words, and I give them emphasis because they were adopted only after careful observation and inquiry. I cannot, however, help expressing regret that, throughout the several official investigations into matters of such paramount importance as the various conditions of natural waters and their fitness for human consumption, the powerful inquisitorial agency of the microscope should have been so quietly discarded. With all due deference to the ability, ingenuity, and dexterity of such men as Professors Frankland, Wanklyn, and others, chemistry cannot give us the all-precise information we require concerning the organic matter found in various waters. We thank chemistry for telling us the minute quantity of organic matter a water contains, and also the still more minute quantity of the organic matter which is in an albumenoid form, and therefore possibly in a dangerous form. But this important point is the very one which remains to be determined. The albumen may be perfectly harmless; but, on the other hand, it may contain or be itself the very centre of disease and death. I can but express my confident hope that the elucidation of this important problem will soon be classed among the proud achievements of Science.

Having, as we will suppose, provided a city or town with a liberal supply of water whose quality is beyond suspicion, our attention must be directed to its removal after becoming—whilst fulfilling its end—polluted and poisonous: for great as are its utility and convenience in a pure state, so much greater are its nuisance and danger when, having done its work as a scavenger and as a vehicle for carrying solid matter, it still stagnates in our midst. If the public health is to be maintained, human excreta must be at once removed. We may deodorize it by simple means, but there is not yet known to science a method or system by which, on a large scale, disinfection can be guaranteed, or practically carried out; and if the germs of disease are here so subtle that we cannot ensure their destruction by powerful chemical agents, nothing remains to be done but to immediately remove them, as the only safe course. The question then arises as to which is the best method of doing

so. Water is the most convenient, the most decent, and, from its more satisfactory results, in the end the cheapest vehicle; but we must be careful so to design and arrange our sewers that they do not become elongated cesspools, but rather the means through which the sewage may be conveyed away with all possible dispatch, and at the same time be thoroughly self-cleansing.

Against the neglect of careful sewage ventilation I presume there is now scarcely any necessity to utter a warning. The attention of the public has been painfully drawn to this subject of late, and I venture to think that but very few intelligent Englishmen have not been enlightened upon the importance of this matter. Much has been said concerning the necessity of providing proper means of escape for the noxious gases generated in our sewers, instead of taking such pains as I am reluctantly compelled to confess has been done to conduct them directly into our very habitations, there to spread broadcast pestilence and death. The exclusion of these vapours from our houses, and their general diffusion into the external atmosphere, is without a doubt one step in the right direction; but although the chances of evil effects are thereby diminished, as their dilution with the atmospheric air is considerable, and the organic impurities of the vapours are destroyed by the oxygen in the air, still the dilution is only a partial remedy, and the oxydation requires time. Our duty is clearly, therefore, to strain the vapour and oxydize its impurities before it is permitted to escape, just as we ought to purify the sewage before it flows into the stream, and not leave it to be purified by the stream.

The sewage having thus far been safely conveyed beyond the boundaries of the town, its ultimate disposal has to be provided for. With the various modes of treating town sewage which have been put to the test most of you, no doubt, are more or less acquainted. There are methods of Precipitation, of Filtration, and of Irrigation. Of the first there is the Lime process, which has been applied at Tottenham, at Leicester, Blackburn, and other places. This method has hitherto failed both in purifying the sewage so as to render the effluent water fit for admission into streams, and also in producing a deposit of fair value in relation to the cost of its manufacture. Lime has been used in conjunction with chloride of iron, and perchloride of iron has been used alone, but with no better permanent results. In the same category may be classed the treatments with the sulphates and carbonates of lime and magnesia. No better results can be credited to Blyth's expensive method with the superphosphate of magnesia. There is also Bird's Sulphate of [illegible]a process, formerly tried at Croydon and Cheltenham,

but now abandoned for irrigation. Numerous others have been introduced to the notice of the public, but none have attracted so much attention as the A B C process—indeed, a special report of its working and results has been issued by the Royal Commission on the Pollution of Rivers. The ingredients of the compound which is applied to the sewage are, as you all know, chiefly composed of alum and clay, but small quantities of blood, charcoal, and certain salts are also introduced. The process, although precipitating most of the suspended impurities, does not render the effluent water sufficiently pure to be admissible into running streams. As to its commercial value, the Commission report that it "cannot repay the cost of manufacture." I must not leave the A B C process, however, without referring to the experiment now being conducted by the Native Guano Company at Crossness upon 500,000 gallons of London sewage daily. In a short time this experiment will have been thoroughly tried, and we shall then be able to finally judge of its merits. So far, then, as purification by precipitation is concerned, none of the processes with which we are as yet acquainted can be regarded as perfectly satisfactory in their results. The Rivers Pollution Commission, indeed, went so far as to say that the present resources of the science of chemistry hold out no hope of a successful result in this direction.

Next there is the process of simple Filtration, which acts not only mechanically but chemically, by oxydizing the organic matters contained in the sewage, and which are thereby converted into harmless inorganic salts. As far as the effluent water is concerned the process may be made thoroughly effective, although, as might well be supposed, different soils vary greatly in their efficiency as filtering media. The objections to the system are—and I here feel bound to reverse the order of the conclusions arrived at and recorded by the Rivers Pollution Commissioners—first, the nuisance arising from the removal of solid fœcal matters, especially in very hot weather; and, secondly, the unremunerative character of the results, inasmuch as that the whole of the manurial ingredients would be absolutely wasted.

We have in the last place Irrigation—a process which has now undergone the test of extreme practical application under greatly varying conditions, but with an almost uniformly satisfactory result. To the all-important question, Does the system effectually remove the sewage nuisance? I think we are in a position to answer with confidence in the affirmative. An average of the numerous cases included in the Report of the Rivers Pollution Commissioners gives of impurities *removed*

from the sewage, dissolved organic carbon 68·6 per cent., of dissolved organic nitrogen 81·7 per cent., and of the suspended organic matters 97·7 per cent. But the analysis given by the Commissioners is somewhat misleading, the purification being greater than they show, as impurities are concentrated in effluent water owing to evaporation and absorption whilst passing over the surface of the land—which is never less than 30 per cent., and in some cases experiments have proved the loss to be as much as 80 per cent.

The purification of the sewage by irrigation in respect to its soluble constituents—the removal of which is the chief difficulty in the sewage problem—is thus more than twice as effective as any of the processes of precipitation and of upward filtration. It is scarcely so complete, however, as the method of intermittent downward filtration; for by this latter process there is removed, on an average, of dissolved organic carbon 72·8 per cent.; of dissolved organic nitrogen, 87·6 per cent.; and of suspended matters, 100 per cent. But the issue must not be tested solely by the analysis of the effluent water. We have the atmospheric nuisance to consider; and this, irrespective of the question of cost (of which I must speak directly), turns the balance in favour of irrigation. This is, perhaps, best accounted for by supposing that the disadvantage of the far larger evaporating area of the irrigation process is more than counterbalanced by the powerful absorbing and deodorizing qualities of the same large area. True it is that to deodorize is not necessarily to disinfect, and the abundant evidence of the freedom of sewage farms from the objectionable vapours detectable by the sense of smell goes therefore only half way. But fortunately the experience of such cases as Edinburgh and Croydon goes the other half; and nowhere can it be said that the fanciful and once popular objections to sewage irrigation have been satisfactorily established by facts.

If we desire to go farther, there is yet a combination of the precipitating and irrigation processes which would appear to be the *ne plus ultra* of the sewage question. This end would be arrived at by first deodorizing the sewage at the sewer's mouth, and precipitating the solid matters into a manure of such a value as would pay for the cost of its manufacture and cartage, leaving at the same time an inoffensive supernatant liquid, not materially deprived of the soluble fertilizing matters originally found in the sewage. A process recently introduced by Mr. Forbes will perhaps meet this case. The agent—phosphate of alumina—has hitherto been a costly material; but the sewage is deodorized, and the solid manure, as stated by the patentee, is of high value, and the fertilizing power of the fluid

is considerably augmented. This process is being experimented upon at Tottenham, but its application on a large scale is necessary before a true estimate of its value can be formed.

Before leaving this subject, I would have you understand that I do not wish in what I have said to bias your minds in favour of any one system. On the contrary, I would urge upon you the necessity of estimating the relative values of the different systems which have been, or may yet be, introduced, solely upon their respective merits. You will most likely find, moreover, that while one system will be best adapted for one case, a different system may be more suitable for another. We should hold ourselves prepared, therefore, to support that method which will, all things considered, be likely to achieve under the special circumstances the most satisfactory results.

Upon the important subject of land transit, it is my pleasurable duty to record the completion during the past year of a work which stands unrivalled in its department: I refer to the Mont Cenis Tunnel. To the foreign engineers who conceived and carried out so grand a scheme, we would tender our most hearty congratulations. They may well be proud of their handiwork. The more important features and principal dimensions of the Mont Cenis Tunnel, which was commenced on the 31st August, 1857, and completed on the 14th September, 1871, are no doubt perfectly familiar to you all. I need not therefore repeat them. I cannot forbear, however, giving you one or two figures which will assist in forming an idea of the magnitude of this work. The correspondent of the 'Engineer' says: "The number of boring rods that were utterly smashed or put *hors de combat* during the progress of the Tunnel is simply incredible. In 1863 for every yard of progress on the French side no less than 150 rods were destroyed, and on the side of Bardonnêche the rate was considerably higher; accepting the lower number as an average, it follows that 2,100,000 were used up during the execution of the tunnel." These, I am aware, are mere matters of detail; but we must remember that, while a single blow of the rod would seem to do but little towards driving the seven and a half miles of tunnel, an accumulation of them had to be relied upon for enabling the vast agency of gunpowder to be brought into play. Think, again, of so accurately steering the workmen in their course through the bowels of the mountain from a point ten thousand feet above them—the height of the observatory above the formation level. And again, what laurels the science of Geology has reaped, in that its predictions of the structure of the mountains were verified within a few insignificant feet! Such things require no praise. We cannot but look upon this work

as an evidence of the almost irresistible power and indomitable energy of the mind of man.

We must not, however, forget the successes on the other side of the Atlantic. A work which enables us to step into a car at New York and alight at San Francisco, after a journey by railway of which more than a thousand miles are at an elevation of four thousand feet above the level of the sea, and of which long lengths are over tracks where the savage still hunts the buffalo —a work, too, which enables us to perform this journey of 3300 miles across prairie, mountain, river, and valley, in six days, with comparative safety and certainty,—must assuredly be ranked amongst the first achievements of the age.

At the present time the attention of engineers is largely directed to the completion of long international lines of railway communication, and we may look forward to the completion, at no very distant date, of an almost unbroken road of iron from London to Calcutta.

Concerning the railways of our own country, the following figures, gathered from the returns of the Board of Trade for the year 1870, may prove interesting:—The total authorized railway capital of the United Kingdom amounts to more than 596,000,000*l.* The capital actually raised amounts to 530,000,000*l.*, or about 34,000*l.* per mile, being an increase in the total of 11,000,000*l.* over the previous year. The total receipts amount to 45,000,000*l.*, showing a balance of more than 23,000,000*l.* over the expenditure. The working expenses are 48 per cent. of the gross receipts, as against 49 per cent. of the previous year. In 1867 it was 50 per cent., and in 1864 and 1860 it was 47 per cent. More than 330 millions of passengers were carried during the year, not including season ticket-holders, being an increase of 24 millions, as against 1,500,000 for the previous year's increase. In the conveyance of passengers and goods, nearly three hundred thousand vehicles were employed. The passenger trains ran more than 86½ millions of miles in the year, and the goods and mineral trains nearly 82½ millions, making a total of more than 169 millions of miles. It is true that our ears have become accustomed to the mention of large numbers in connection with railway matters; but those I have just repeated must strike every one as simply marvellous.

Of the improvements and changes that have been brought about in relation to internal communication, amongst the most rtant is the introduction, or rather more general adoption, ht narrow-gauge lines. The extravagance of the past has ıt its lesson, and year by year the necessity is more clearly of redeeming some of the sunken capital—without much rtionate outlay—through large additions to traffic and

revenue, secured by means of branch feeding-lines of cheap construction. In this direction there is yet much to be done, both in this country and our colonies.

In connection with the subject of railway gauges, I may remind you of a curious feat which was performed on the Ohio and Mississippi Railway not very long ago. The line is about 300 miles long, and was originally of the six-feet gauge, which it became necessary to reduce, on account of certain arrangements made by the company. In order to interfere as little as possible with the traffic, Sunday was selected for the work, and all hands available were enlisted in the undertaking. In about seven hours from the time of commencing operations the rails on the entire length of 300 miles had been taken up and replaced to the narrower gauge of four feet nine inches, upon which trains began to run the following day.

Of the several schemes that have been brought forward for improving the passage across the Channel which separates us from the Continent, but little progress seems to have been made towards realization, except in the case of Mr. Fowler's steam ferry. This, the only project which is likely to be seriously entertained, at least for some time to come, has been advanced a stage, and we hope for it the success it deserves.

With tramways much progress has been made of late, and there are at present being worked in London and its suburbs alone no less than 26 miles, while 33 more are already authorized by the Legislature, making a total of 59 miles. Of the Tramway Bills and the application for orders deposited last November, those relating to the metropolis are for powers to construct nearly 30 miles of way. The revival of this mode of transit has thus been as prolific as it has been rapid, and there seems to be a mania for tramways which is scarcely justified even by the success that has already attended them. It is, perhaps, to be regretted that Parliament did not act with somewhat greater caution before allowing the wholesale introduction of a system of which even the merest details are matters of concern to the public. There is much, indeed, in connection with tramways, as we find them now in London, which is capable of great improvement, and of which the weak points and errors might have been discovered and remedied on one experimental line. It is to be hoped that the evils will in future be overcome, and I think also that we may look forward to the introduction before very long of suitably designed locomotives in the place of horses, especially on the more strictly suburban lines.

Closely allied to the subject of street tramways is that of street paving. Macadamized roads have in certain parts

of the metropolis recently made considerable progress towards perfection. By the use of steam rollers the road surfaces have been most efficiently consolidated and brought to a regular form and degree of "finish," so to speak, which is in every way most satisfactory. The tedious process of consolidation for the ordinary traffic of the road, accompanied by all the inconveniences of noise, increased frictional resistance, wear and tear of vehicles, the trying demand upon the muscles of the horses and the equanimity of the drivers, will, it is fervently to be hoped, soon be numbered among the things of the past; for apart from the luxury of a good smooth road made ready for comfortable use in a few hours, there is at the same time a most desirable economy not only to the users but to the trustees of the road. A reliable authority on these matters has given it as his opinion that one-third of the road material is literally wasted by being pulverized by the traffic before the surface is consolidated. Indeed, as the road is for the convenience of the traffic, and not the traffic for the road, the road—as it has been tersely put—should be consolidated not *by* the traffic but *for* the traffic. On the question of economy, Mr. Frederick Paget has shown that on an average of cases in different parts of Great Britain and the Continent there is by the employment of simple horse rollers a saving of 40 per cent. in the cost of maintaining the road. And further, it is fully within the mark to estimate that a saving of 50 per cent. of the cost of maintenance is effected by the employment of heavy steam rollers. Indeed, the French engineers set down steam rolling as 50 per cent. more economical than even horse rolling.

But there are many thoroughfares where even steam-rolled macadam would not economically resist the concentrated and destructive traffic, and for such situations the orthodox granite paving has of late years found a rival in asphalte. In Paris this material has been extensively used for roads since 1854, but it is only within the past year or two that it has been put to the test in some of the busy streets of our metropolis. About 25,000 square yards of asphalte carriage way are already laid within the City proper, and a considerable portion of this we have had the opportunity of observing for a round of the seasons, so that some idea may be formed of its behaviour in different states of the weather. It appears that when very wet or dry the asphalte is less slippery than granite. When there is but little moisture, however, the asphalte stands at considerable disadvantage, especially if it be not clean. Should a frost occur immediately after rain, sand, scattered upon the

surface, will obviate the inconveniences and dangers likely to be otherwise incurred. On this subject, in which we must all feel more or less interest, I cannot forbear quoting directly from the recent and able Report of Mr. Haywood, engineer to the City of London. Speaking more particularly of the compressed asphalte of the Val de Travers Company, that gentleman says—"Upon careful consideration of the various facts and opinions brought under my notice, as well as from much personal observation, I have no doubt that compressed asphalte in a proper condition of cleanliness is not upon the average more slippery than granite, but that there are times when it is much more slippery; that horses falling upon it are less injured, but have more difficulty in getting up; that if asphalte is extensively laid down, ordinary travelling upon it will be as expeditious as upon granite, but speed must be slackened in streets where there is much traffic or where it may be needful to stop suddenly; and that it is less fitted for great speed and for exertion of strength in drawing heavy loads." Upon the question of the relative comfort and convenience of asphalte and other road surfaces there can scarcely be a difference of opinion; the absence of noise and dirt, the diminished labour to the horses, wear and tear of vehicles and harness, are all that can be desired. For its durability and ultimate cost of maintenance we must abide the test of time.

At the present period the consumption of gas throughout the United Kingdom is regarded as a subject of considerable importance, not only on account of the large capital employed in gas manufacture, but also because it represents a correspondingly important consumption of that nationally valuable material—coal. The consumption of gas is rapidly increasing, and its usefulness is daily extending, not only for lighting, but for heating and culinary purposes; it is in many cases being used also as a motive power in competition with steam. During the past year the colossal works of the Chartered Gas Company have been completed, and are now in full operation. Through the kindness of the Company's engineer, Mr. F. J. Evans, the members of this Society had an opportunity of minutely inspecting the works, and were much gratified and instructed by the engineering skill displayed in the construction of the apparatus and machinery of this enormous manufactory.

The site purchased for the Becton works is about 213 acres. The retort-houses, four in number, are fitted with 1080 through-retorts, equal to 2160 mouth-pieces. The gas-holders, four in number, are equal to the storage of about four millions of cubic feet. The works, with the number of retorts named, are capable

of producing ten millions of cubic feet per day, and for this purpose it will be necessary to consume the enormous quantity of 1000 tons of coal during the same period. The provision made for the distribution of this large quantity of gas is of corresponding magnitude, and consists of an arterial main eleven miles long, more than three-fourths of which is four feet in diameter, the remainder being three feet in diameter. This is connected to the old stations of the several companies that have been bought up by the Chartered Company, which latter now supplies over one-fourth part of the total gas consumed in the metropolis.

Vast as are their resources, they are equalled in extent of supply by the Imperial Gas Company, by whom also building operations of great magnitude are at this moment being carried on.

Without particularizing the operations of the gas companies in detail, I will give you the total result of the past year's working of all those which are included in the Metropolis Gas Act of 1860.

Total capital, including borrowed moneys upon which interest and dividends are paid, 8,272,816*l.*

The total gas receipts from meter rental and public lamps consumption were as follows:—

Common coal-gas	£1,598,563
Cannel „	220,069
Public lamps, including lighting same ..	226,680

Thus showing total receipts for gas to be 2,045,312*l.* In addition to these sums, the meter rental received amounted to 31,558*l.*; and the residual products, 424,952*l.*

The total quantity of gas manufactured was 11,890 million cubic feet, and the quantity of coal used to produce this was 1,225,815 tons. The gross profit made amounted to the sum of 732,829*l.*

From the above figures, applying as they do to the metropolis only, some idea may be formed of the importance of this branch of engineering and manufacture in the United Kingdom generally. Yet, large as is the consumption of gas, the elasticity of increasing demands is scarcely less surprising, and we may take it that on an average with the whole of the gas companies throughout the kingdom the annual increase in manufacture is from 7 to 10 per cent.

From the importance of gas lighting, the subject ever affords large scope for improvements both in its manufacture and distribution. In connection with gas lighting, two inventions have

during the past year been introduced, which, according to the views of their respective promoters, are likely to bring about a radical change in the manufacture of gas. The first is a process by which Dr. Eveleigh, the inventor, proposes to greatly improve the illuminating power of gas without additional cost in its manufacture—a most desirable object, if it can be satisfactorily effected. A company has been formed for the purpose of ascertaining whether or not the process of manufacture, carried out on a large practical and commercial scale, will justify the anticipations founded upon the laboratory experiments. We hope soon to be made acquainted with the results of this method.

The second invention to which I refer is one that has lately been tested at the Crystal Palace at Sydenham, and is known as the Oxyhydric Light. It was introduced at the Paris Exhibition, 1867, but was not tried in England before the occasion just mentioned. The method consists of introducing oxygen gas at the point of combustion with the ordinary coal-gas. The principle has been well known for many years, but the cost of making oxygen has been hitherto so great as to exclude that gas from such applications, although it ensures perfect combustion, and hence a greatly improved light. The chief object of the present invention is to generate oxygen under a new process, by which its cost is materially reduced. No doubt it possesses great scientific merit; but whether its commercial value will be equally good remains to be determined.

It cannot fail to be noticed as a tendency of the times that local authorities are desirous of absorbing all gas and water companies' interests. It is also evident that the Legislature is favouring such a policy, and judging from the transfers now taking place, it may be fairly anticipated in a few years all these undertakings will be purchased and worked by the municipal or other existing local authorities.

I cannot conclude without a word or two concerning the recent report of the Coal Commission. The exhaustion of our coal-fields is a contingency, the discussion of which must in no way be shunned—indeed it is forced upon us; and it is our duty to the nation as engineers to give the several practical bearings of the question our earnest consideration. In the first place, the miner must be enabled to work at increased depths down in the bowels of the earth with safety and comparative comfort, for upon this depends, in direct ratio, the quantity of coal that will be available for our use. The deepest coal-mine in England is at the Rosebridge Colliery, which has attained the depth of 2500 feet. It may be mentioned that the Simon Lambert Pit in Belgium reached a depth of 3489 feet, but the mine is not

at present being worked. The Coal Commissioners assumed a depth of 4000 feet—about four-fifths of a mile—as a fair limit on which to base an estimate of the quantity of coal available. On this assumption the probable quantity of coal contained in the ascertained coal-fields of the United Kingdom is set down by the Commissioners as 90,207 millions of tons. The coal which probably exists at workable depths under the permian new red sandstone and other superincumbent strata is calculated to amount to 56,273 millions of tons.

There is thus an aggregate quantity of 146,480 millions of tons which may be calculated upon at a depth not exceeding that just named. Enormous as this quantity is, it has to be measured by a yearly consumption proportionately great. The total quantity raised in 1869, when the last returns had been made up, was 107 millions, of which 10 millions were for exportation; so that the quantity of coal just mentioned as available (146,480 millions) would sustain our present consumption for 1273 years.

But the main question is, What will the future consumption be? It is one of the most important offices of engineering science to bring about reductions in the consumption of fuel required to effect given results. In the application of steam power, in the manufacture of iron, and in all varieties of industry, more or less progress is being continually made towards the attainment of theoretical efficiency. This, however, is a goal which we can never hope to reach, and we must be satisfied with very slow advances towards a very distant point. If we could utilize all the heat energy pent up in a pound of coal we should get an amount of work equal to more than ten million foot pounds, or nearly ten times the greatest duty obtained from our best engines, and this but exceptionally. Taking the average of the steam engines in this country it is probable that not more than one-thirtieth of the theoretical value of coal as a mechanical agent is realized. Professor Jeavons has shown that every improvement in the economy of coal has, as far as the steam engine is concerned, resulted in an increased instead of a decreased consumption, because steam power has been more extensively employed in proportion as greater economy of fuel has been attained. Applying the same reasoning to the use of coal for other purposes, and assuming thereon a certain rate of increase in the consumption, it is shown that the 146,000 millions of tons would be exhausted in the short space of 110 years; and it may be remarked that the rate of increase which Professor Jeavons assumed in 1865 has been very fairly borne out by the consumption in succeeding years.

From a table of the probable future consumption, prepared by Mr. Price Williams, and included in the Report—which table specially regards the diminished rate of the increase of the population—it would appear that the 146,000 millions of tons now in stock would hold out for another 360 years. Calculating, again, from a steady and arithmetical increase equal to the average increase of the past fourteen years—which is about three millions of tons per annum—our stock would be exhausted in 276 years. The coal lying at depths greater than 4000 feet has been estimated by the Commission at 48,465 millions of tons. Supposing the whole of this to be available—which is, of course, quite a matter of conjecture—the 360 years, deduced from Mr. Price Williams' table will be altered to 433 years. The 276 years based upon the arithmetical increase of three millions of tons per annum will become 324 years, while should the consumption remain constant at its present rate of 115 millions, this grand total of nearly 200,000 millions of tons would meet our requirements for nearly 1700 years, or say, to about the year 3570.

But we must not be led away by such figures as these. Indeed, the Commissioners themselves do not hesitate to remind us that at the depth of but 3400 feet the temperature of the air would be about equal to the heat of the blood; while of the vast quantity regarded just now as being available more than 16,000 millions of tons are at depths of between 6000 and 10,000 feet, at which latter the temperature would in all probability be 215° Fahr., or more than 3° above the temperature of boiling water.

Should the advance of science enable us to work coal at these prodigious depths, the cost of work will most assuredly be proportionately increased, and when fuel has thus become dearer its consumption will be checked, and the stock will therefore hold out correspondingly longer. But this implies the crippling of the strong arm which earns our national wealth. True it is that there are vast and almost inexhaustible coal fields in other parts of the world yet untouched, and while coal is to be had there would be the opportunity of purchasing it. But, in the words of the Coal Commissioners, "it may well be doubted whether the manufacturing supremacy of this kingdom can be maintained after the importation of coal has become a necessity."

There are many other subjects of importance to which I could have wished to refer, but I feel that I must not now longer detain you. I have touched upon a few matters of general interest to the profession, it is true, but I must confess that on this occasion the topic which I feel should most concern us as an

associated body is our Society's future welfare. It is only natural that to some extent we should be more buoyant or more depressed according as the profession generally is in a state of activity or depression. But we must take courage and we must work. I, for one, will use my best endeavours, not only while I hold this office, but as long as I remain a member, to secure the prosperity of the Society of Engineers.

March 4th, 1872.

JABEZ CHURCH, PRESIDENT, IN THE CHAIR.

EXAMPLES OF RECENT PRACTICE IN AMERICAN LOCOMOTIVE ENGINEERING.

By VAUGHAN PENDRED.

It is a somewhat remarkable fact that the locomotive engines of different countries manifest peculiarities of construction which are as well defined as the national characteristics of their builders. The typical French locomotive, for instance, is very unlike the typical English locomotive. In the first we have complication, real or apparent, carried almost to the extreme. The outside valve gear, the decorations of the engine, the peculiar arrangement of the boiler fittings, to say nothing of a hundred and one little points of difference, all tend to make the French locomotive a machine totally diverse from those which we see on our own railways. In France, however, as in this country, locomotives totally unlike each other in all their principal features are to be found in abundance. In England locomotives vary almost infinitely in type. The same statement holds good of France, and indeed of the Continent generally, but it is none the less true that the French type never merges into the English type. The difference is the same as that between the horse and the dog. We have all manner of breeds of both, but the horse never becomes a dog, nor the dog a horse.

If we turn to the locomotive engines of the United States, we find, however, that although those engines constitute a distinct family in themselves, the differences between various members of the family lie principally, if not altogether, in matters of detail. Certain external or important features are common to all American locomotives. In both England and France inside as well as outside cylinders are freely used by different designers, but in the States there are practically no inside cylinder engines. We have in this country numerous examples of locomotives fitted with bogies, as, for example, on the Great Northern, North London, and Metropolitan Railways, but we have still larger numbers without bogies. In the United States, however, all locomotives, with a few insignificant exceptions, are fitted with

bogies. In this country and on the Continent inside and outside frames enjoy about equal favour. In America all engines have inside frames only. In England the plate frame is used to the exclusion of all others. In the States the plate frame is unknown, its place being invariably taken by the bar frame. The list of special characteristics of the United States locomotive might be largely extended, but the author has said enough on this subject to serve his purpose. The English locomotive is familiar to those present, but the peculiarities of the American locomotive are not generally known; and in order to supply some information concerning the most recent practice of American engineers, the author proposes to describe a passenger engine and two goods engines of the most recent construction (1871) working the traffic of the Louisville and Nashville Railway, one of the first class main lines of the United States, and in order to further elucidate the subject, some notice will be taken of the locomotives now employed in working the New Jersey Railway.

It is worth while here to dwell for a moment on the fact that all American locomotives are fitted with bogies, or Bissell trucks. A very few engines are, it is true, made and worked in the States which have no bogies, but these engines are of very small size, and they hardly, if at all, affect the statement that all American locomotives have bogies. It is commonly assumed that this invariable use of the bogie is due to a desire on the part of American engineers to keep the virtual wheel base of their locomotives very short, but this reason will not alone suffice, because we find that in the States engines with a tremendous length of wheel base are freely used. For example, the goods engine illustrated has a driving wheel base of not less than 13 feet 10 inches. The true reason why the bogie enjoys so much favour appears to lie in the fact that the leading end of the engine is much heavier than is usual in England. Unfortunately it is not easy to ascertain what the distribution of weight is in actual figures, because in the States engineers do not weigh their engines with as much care as in this country. But it will be shown further on that from the nature of the cylinder castings they must weigh very much more than English cylinder castings of the same power. Then we have the enormous spark-catching funnel—going out of fashion now—and the cow-catcher, all augmenting head weight. Besides, the bogie makes the engine run easily, and this ease of running is due no doubt to the fact that the great weight forward is supported on a single central point of suspension, and that as a consequence the frames are spared a great proportion of the twisting strains to which they are otherwise subjected. If we take the frames of ordinary six-wheeled locomotives, without

the boiler or any strengthening other than that afforded by the buffer beams and the motion plate, and run it over a bit of ordinary permanent way, we shall find it work and twist; first one corner goes up, then another, and so on. In practice the frame is braced and stiffened by the boiler and the inside cylinders, but it is by no means easy to make it quite stiff with outside cylinders. But in spite of the stiffening there is always a tendency to twist in existence, and power is wasted in fighting with this twisting tendency. Practically the frames of the engine tend to remain parallel with the road, falling when it falls, rising when it rises. Of course it is the purpose of the springs to compensate for this, and the axles only should follow the curve of the road; but locomotive springs are very stiff, and very much more power than is generally supposed is wasted by the mere friction of the spring leaves on each other every time they are moved. If the engine is carried, however, on three points of support only, the twisting strain is reduced to nothing, and even when the engine is carried on four driving wheels and a bogie, the twisting strain is obviously very much less than it would be if the engine were carried on six wheels. The author is certain that every locomotive engineer present who has had any experience with a properly-constructed bogie will admit that with it engines run more sweetly than without it, and he ventures to suggest that the value of the bogie and the reason why it possesses value would form an admirable subject for discussion by the members of the Society.

Whatever is the cause, American engineers fit all their locomotives with bogies, and it may interest those present to know that the bogie was first fitted to an engine in the United States in 1831 by Mr. John B. Jervis, in an engine designed by him for the Mohawk and Hudson Railroad. An engraving of this engine recently appeared in the *American Railroad Gazette*, which drawing lies on the table. This engine was built by Adam Hall of New York, was called the 'Experiment,' had 9⅝ cylinders, 16-inch stroke, 5-feet drivers, and as it was intended to burn anthracite, the grate was 5 feet long. It weighed 7 tons.

The author will now proceed to describe three locomotives, which may be taken to represent admirable examples of the most recent practice in locomotive engineering in the United States. These engines are, first, two goods locomotives, and secondly, a passenger locomotive, designed by Mr. Thatcher Perkins, locomotive superintendent of the Louisville and Nashville Railway.

The author will begin with the goods engine. The wheels are ten in number, six coupled drivers and four bogie wheels. They are all of cast iron, with steel tyres. The driving wheels are 4 feet

5 inches diameter, the truck or bogie wheels 2 feet 2 inches. The leading driving wheels are without flanges, and $5\frac{1}{2}$ inches wide on the tread. The shape of the flanges is peculiar; they are worked off from the back nearly to a sharp edge. The main axles are $6\frac{1}{2}$ inches diameter and $5' 9\frac{1}{4}''$ long. They are perfectly parallel throughout. The journals are $7\frac{1}{2}$ inches long. There are no angles, the end play of the axles being prevented by collars, an arrangement unknown in English practice, but one which, leaving the fibre of the axle intact, and avoiding all shoulders or corners, appears to reduce the chance of breakage to the lowest possible limit. The bogie axles are $4\frac{1}{2}$ inches diameter and 6 feet $1\frac{3}{8}$ inch long. The bearings are $7\frac{1}{2}$ inches long, and the axles taper to a diameter of 4 inches in the middle, and play is prevented by cast-iron collars secured with set screws. There are no journal shoulders, except those against which the wheel is forced up. This system of construction is very strong and cheap, and appears to be worth the attention of English engineers. The gauge of the Louisville and Nashville Railway is 5 feet.

The frames are heavy forgings. The upper bar, which is the heaviest, has a section of $3\frac{1}{2} \times 4$ inches. The wrought iron keeps to the hornplates are very heavy. They are fitted with great care, and constitute in fact important members in the lower flange, if we may so call it, of the girder. These frames are, as a consequence of their great virtual depth, extremely stiff. The construction of the spring pillars is worthy of notice. Instead of bearing on a single point only of the axle box, as in English practice, they straddle over the frame, and bear on the four corners of the box. It is believed that in this way the box is kept more steadily to its work, and that the wear and tear of the frame plate slides is reduced, because once properly adjusted there is less tendency for the box to twist or tip. In English practice, if the pillar bears the least degree to one side of the axle centre more than the other, the box must tip, and bear heavily on the slides. This is a point worthy of attention.

The main springs are 34 inches long from centre to centre. The buckles rest directly in cavities made for their reception in the tops of the spring pillars. Nothing can be cheaper or more simple. There are two equal balance beams at each side of the engine. The trailing beams are 4 feet 9 inches long from centre to centre, and $5\frac{1}{2}$ inches deep. The leading beams are 3 feet 5 inches long, and $4\frac{1}{2}$ inches deep. They are simple forgings, with a slot in the middle, through which a vertical wrought-iron bearer passes. Through the upper part of this and above the beam a key $2\frac{1}{4}$ inches deep is driven, and on this as on a knife edge the beam works. A small piece of hard steel is let into each

beam to take the pressure of the key. This appears to be a very good and simple arrangement, and very much cheaper than the turned pin system of fitting used in this country, while it allows the utmost freedom of motion. The spring stirrups are fitted up in the same way. The axle brasses are not solid, as with us; each bearing is fitted with three dovetailed brass blocks let into the heavy cast-iron axle box. All the portions of the engine so far described are cheaper to make and fit up than the corresponding portions of English locomotives, and manifest no small ingenuity and skill on the part of the designer. The bogie used with the engine is of the ordinary type.

The cylinders are 18 inches in diameter, the piston stroke being 2 feet. The peculiar feature about them is, that they are neither right nor left handed, that is to say, each cylinder is complete in itself, and can be put on either side of the engine indifferently. They are both exactly alike, and the ports are equidistant from the ends. Each cylinder is one with a half saddle, and constitutes an enormous casting. The two half saddles, being bolted together, make one whole saddle, in which the smoke box rests, and the saddle is secured to the smoke box by heavy and numerous bolts. The cylinder castings rest in them on the top bar of the side frames, to which they are secured. This arrangement, although heavy, makes an admirable job, as the cylinders never work loose under any circumstances, while the weight of the boiler forward is carried in the most efficient way possible. The distance from centre to centre of the cylinders is 6 feet 9 inches. The pistons are packed with two plain brass rings in each. The piston rods are of steel, 2½ inches diameter. The construction of the guide bars is very peculiar: above each piston rod are fixed two flat steel guide bars, one over the other, with a space of 1½ inch between them. The bars are 5 inches wide. The cross head is fitted with two brass liners, which can be adjusted as they wear. The author will express no opinion on the merits of this arrangement, simply stating that it is found to be cheap to fit up, and that it works very well in practice. The connecting rods do not require especial comment, except to state that they are of great length—9 feet. The coupling rods are of the ordinary kind. It may be worth while, however, to state that American engineers frequently use trussed coupling rods to give vertical stiffness, and channel iron is used to obtain lightness and beauty of appearance.

The valve gear is of the fixed open link type; the eccentrics have a throw of 5½ inches, and the travel of the valve in full gear is precisely the same. The eccentric rods are only 22½ inches long, and the way in which they are attached to the eccentric hoops deserves notice, as being extremely unusual. The slide

valves are worked by rocking shafts, as in all American locomotives. The rocking shaft arms are 9 inches long. The link is struck to a radius of 75 inches, but the length of the radius rod is 76 inches. The link is 20 inches long in the slot, but the distance from centre to centre of the eccentric rod pins is $13\frac{1}{4}$ inches only. The link hanger is 16 inches, and the radius rod hanger $11\frac{1}{4}$ inches long. The reversing arm is 20 inches long. The valve spindle is 3 feet $2\frac{1}{2}$ inches long and 2 inches diameter. It is of iron, and steadied at the outer end by a guide. It lays hold of the valve by a solid fixed bridle, a right and left handed screw affording the means of adjusting the rod to the proper length. The steam ports are 17 inches long and $1\frac{3}{8}$ inch wide. The exhaust port is $2\frac{1}{2}$ inches wide. The valve is 9 inches long, and has $\frac{7}{8}$ inch lap. The blast pipes, one to each cylinder, are $3\frac{3}{4}$ inches diameter. The steam pipes, of cast iron, are $3\frac{1}{2}$ inches diameter. The weight of the radius rods of the link motion is balanced, not by a weight, but by a transverse spring.

The boiler is 21 feet 8 inches long over all, and 4 feet in diameter at the centre of its length. The tapering connection of the barrel with the fire box is so common a feature in American locomotives as to require no comment. The engine is intended to burn bituminous coal on rocking bars. The internal fire box is 5 feet 3 inches long, 3 feet 1 inch wide, and 5 feet 2 inches high. The outside fire box is 5 feet 10 inches long, 3 feet 8 inches wide, and 6 feet $11\frac{3}{4}$ inches high. There are 150 iron tubes, each 2 inches diameter and 12 feet 4 inches long. The heating surface of the fire box is 94 square feet, that of the tubes 968 feet, or in all 1062 square feet. The grate area is $16\frac{1}{4}$ feet.

The manner in which the leading end of the boiler is curved has already been explained. The fire box is supported by two long and heavy castings, secured to the sides of the box, and resting on the top bars of the side frames. Straps go round this bar and secure the box, but permit the boiler to move on the bar under the influence of forces producing expansion and contraction. Over the fire box is a steam dome 2 feet 4 inches in diameter. The top of this dome is of cast iron, in two parts; the lower part is riveted into the wrought-iron ring, a job which must test the quality of the cast iron rather heavily; the top is secured with bolts in the usual way. It is fitted with two safety valves, one loaded by a dual action coiled spring. In the dome is placed the regulator, a double-beat equilibrium valve, worked by a pull-out [illegible] On the middle of the boiler is a sand box. The orifice [illegible] sand to escape are covered by two powder-

horn slides, worked from the foot plate. There is no glass water-gauge; we have instead the usual row of try-cocks peculiar to the States.

Instead of the enormous funnel generally met with until recently on the United States locomotive, Mr. Perkins uses one much more elegant in form, and fitted with a spark arrester of a novel kind. The main chimney is 18 inches in diameter and 6 feet 6½ inches long. A tail piece comes down inside the smoke box, reaching quite down to the exhaust nozzles, which fill it at the bottom. This tail pipe is perforated all over with ⅜-inch holes. Outside the tail pipe is another as long as the smoke box is high. This is blank, except at the upper end, where it also is perforated. The action of the exhaust tends to make a vacuum between the two pipes, and so draws in the waste products of combustion. The scheme is said to answer admirably, the draught being excellent, and the arrest of the sparks complete.

It only remains to describe the pumps, which are worked from the trailing axle by a counter crank. They are fitted with air vessels on both the exhaust and delivery sides. Each pump plunger is 4 inches diameter and 7 inches stroke. The valve crank is 8½ inches long. We have here an extremely powerful type of goods engine, which possesses many points of novelty.

The author will now proceed to describe the second goods engine, designed by Mr. Perkins, which is shown in elevation and plan in the engraving. In many respects this engine resembles that already described, but there are some points of difference worth notice. The engine is carried on eight wheels, four in a bogie and four drivers. These last are but 4 feet 10 inches diameter; they are of cast iron, with steel tires. The axles are 6½ inches in diameter; the fittings of the axles, the axle boxes, and the construction of the journals are precisely the same as in the engine already described. The bogie wheels are of chilled cast iron, 2 feet 2 inches diameter. The axles are 4½ inches diameter. The construction of the bogie is similar to that usually adopted in the States. The frames are not precisely the same as those already described, each frame consisting of two main forgings, united at the leading driving wheel hornplate. The after part consists of two bars, while the leading portion is on one bar only, connected with the after part by a Y piece. An inspection of the engraving is required to make the details of the mode of junction quite clear. The fitting of the springs and balance levers is nearly the same as in the first engine, the balance beams being 5 feet 3 inches from centre to centre, and there is a slight difference in the method of fitting

the spring stirrups to the spring ends, the knife-edge system being very fully carrried out. The main or after bar of the frame at the fire-box end is 4 inches deep by $3\frac{1}{2}$ inches wide. The lower member is 2 inches deep by $3\frac{1}{2}$ inches wide. The whole depth of the frame at the hornplates is $21\frac{1}{2}$ inches. The main springs are 3 feet long from centre to centre. The bogie springs are 3 feet $1\frac{1}{2}$ inch long. The forward or single bar portion of the frames is 4 inches deep and $3\frac{1}{2}$ inches wide. It is swelled out at the place where the cylinder saddle slots rest on it, and four keys are driven here, as shown in the plan, to aid in securing the cylinders. The total length of the frames over all is 22 feet, and the width between them is 7 feet 4 inches. The wheel base of the drivers is 8 feet 4 inches, the wheel base of the bogie is 5 feet 6 inches, and the total wheel base is 22 feet. The gauge is 5 feet.

The cylinders are 18 inches diameter, with a stroke of 2 feet. They are practically identical in every respect with those already described. The pistons are a little different. The piston rods are of steel, $2\frac{1}{2}$ inches diameter. The cross head is guided by four bars, two on each side, but the bars are arranged, as will be seen, at a higher level than the piston rod, and the method of fixing them to the cylinder cover is worth attention, the distance piece between them not being cast on the cover, but bolted to the enormously large flange of the stuffing box. The cross-head slides are of immense length — 16 inches — and the guide bars, which are of steel, are nearly 3 inches wide. The valve gear is of the usual shifting link type. The throw of the eccentrics is $5\frac{1}{2}$ inches, and that of the valves in full gear the same. The radius of the link is 5 feet 6 inches. The valve spindle is 5 feet 1 inch long from the rocking shaft centre to the centre of the bridle, and it is worthy of note that no joint is introduced, the up and down play at the rocker arm end being allowed for solely by the springing of the spindle. The rocker arms are 9 inches long. The weight of the motion is counter-poised by a very elegant arrangement of spring. A three-leaved single spring is fixed firmly at the end in a buckle forged on the end of an adjustable drop rod, laying hold of a horizontal projection on the link hanger shaft, while the small end of the spring bears on a stirrup secured under the barrel of the boiler. This is much neater than any other arrangement of spring with which the author is acquainted. The exhaust port is 17 inches by $2\frac{1}{2}$ inches, and the steam ports 17 inches by $1\frac{1}{4}$ inch. The valve has a $\frac{7}{8}$-inch lap. The distance from centre to centre of the cylinders across the engine is 6 feet 10 inches. The weight of each cylinder complete, with valve chest, is 2200 lbs., or 19 cwt. 2 qrs. 16 lbs.

The boiler is double riveted throughout. It is 19 feet 10 inches long, and 4 feet diameter. The outside fire box is 5 feet 10 inches long, 3 feet 8 inches wide, and 6 feet 11¾ inches high. The inside box is 3 feet 1 inch wide, 5 feet 3 inches long, and 5 feet 2 inches high. There are 148 tubes of iron, 2 inches diameter outside, and 11 feet 1 inch long. The heating surface of the tubes is 858 feet, of the fire box 100 feet. The total heating surface is 958 square feet. The chimney is of the ordinary spark-catching type. The boiler is fed by two long-stroke pumps, 2 inches diameter, worked from the cross heads direct. The total weight of the boiler is 11,107 lbs.; of the frames and cross heads complete, 4587 lbs.; of the two cylinders, 4400 lbs.; and of the engine complete, with water in the boiler, 71,000 lbs., or 31 tons 5 cwt. This, considering the enormous weight of the cylinders and many other portions of the engine, is much less than would be anticipated. The comparatively small weight is, however, due to the thinness of the boiler plates, which are but ⅜ inch, except the front tube sheet, which is $\frac{7}{16}$ inch. The back tube plate, which is of copper, is $\frac{9}{16}$ inch thick, while the remainder of the fire box is of steel plates only ¼ inch thick.

The passenger engines, designed by Mr. Perkins, for the Louisville and Nashville Railway belong to the class known on the line as No. 29; and they are similar to the engine last described in all but the following particulars. Firstly, the boiler is larger; secondly, the frames are 10½ inches longer between the main axle and centre of cylinder; thirdly, the driving wheels are 5 feet 6 inches diameter, and the axles are 7 inches diameter; lastly, the bogie is totally different from that used in the engines already described; and as it is extremely ingenious in construction, and the author believes almost unknown in this country, he will describe it at some length presently. He will first call attention to the boiler, which represents advanced American practice very well.

The fire box is of steel ¼ inch thick, except the tube plate, which is of copper $\frac{9}{16}$ inch. It is 5 feet 8 inches high, 5 feet 6 inches long, and 3 feet 1 inch wide, all inside measurements. The fire door opening is oval, 14 inches by 21 inches wide, and the way in which it is made up, without angle irons or bar of any kind, is well worth attention. The bottom of the box is made up with a 2-inch bar. The outside fire box stands 22 inches above the internal fire box at the crown. It is 5 feet 10½ inches long outside, and 3 feet 8 inches wide. The water spaces are all 3½ inches.

The fire boxes are stayed together by screwed and riveted stays, spaced 4⅜ inches from centre to centre horizontally, and

4 inches vertically. The crown of the box is supported by fifteen double bridge stays, 44 inches long and 4½ inches deep, resting on brass bearing pieces at each end. In addition there are eight strap-iron sling stays, from the crown of the fire box. The back plate of the fire box and the pipe plate are stayed in a way well worth notice. Instead of continuous rods, as frequently used in this country, running from end to end, rods are used, each with a flat palm at one end and an eye at the other. These palms are riveted to the shell of the barrel, while the eyes are secured by pins passing through angle irons. The boiler is fitted with 172 iron tubes, 2 inches diameter, and 11′ 8½″ long.

There are many points about this boiler, and indeed about the American locomotive boiler generally, which deserve careful attention. The extreme lightness of the plates used, and this with working pressures of 120 lbs. to 160 lbs. on the square inch, is somewhat startling to English engineers, and the number of locomotive boiler explosions which occur yearly in the United States has led to the conclusion that the system of construction is faulty. The author thinks, however, that this opinion has been too harshly formed, nearly all the explosions which occur in the States not being the result of original weakness, but of neglect or overheating—the latter due in a great many cases to the use of very bad water. Little or no thought is given in the States to the quality of water used; anything will do so long as it is not highly charged with mud; and when we consider that American locomotives have to traverse the most out-of-the-way and comparatively uncivilized districts, it is obvious that to obtain good water at every watering station is out of the question. In this country our watering stations are usually supplied from the water-works of the neighbouring towns with water well filtered and comparatively pure, but, as has been stated, this condition does not usually obtain in America.

The author will now give a description of the swing bogie. It consists of a rectangular wrought iron frame 7 feet long and 4 feet 5½ inches wide. To this at either end are bolted the hornplates, which are secured together by a strap tie below. Near the centre of its length and on the upper side of this frame are fixed two bridge frames shackling across it. Under the top frame at each side near the middle of its length is secured a casting in which rests the buckle of the inverted plate spring. This spring rests at each end in a stirrup secured between two wrought-iron bent plates, secured to each other with bolts and distance pieces. These iron plates form a hedge beam, each end of which rests on the top of an axle box. The beams always keep the s[illegible]tance from the rails, while the bogie frame rises and [illegible]e spring bends. It will be seen that as the whole

weight is carried in a line drawn across the centre of the spring buckles, the utmost freedom of motion is given; so the fore wheels can fall and the hind one rise at the same time, or *vice versâ*, without altering the position of the centre of gravity or setting up any cross strains. So far the bogie is in no way peculiar. We now come, however, to the arrangement by which the leading end of the engine is carried, and this the author believes to be comparatively unknown in this country. The two cross beams already referred to are bored at each end to receive a round pin. These pins carry at each side two slings or links 7¾ inches long from centre to centre. By the aid of these rings a casting is suspended, all tensile strain being taken off the cast iron by two wrought-iron ties. The centre of the casting is bored to take the bogie pin, and in the recess surrounding the pin rests a cylindrical casting, the top of which fits into a recess formed to receive it in the cylinder castings.

The front end of the engine is carried by the four links, and is therefore free to swing laterally through a range of 2 or 3 inches. It is obvious, however, that an equilibrium can only exist when both the links are at the same angle, and the result is that the engine has always a tendency to sit right over the centre of the bogie. Now this freedom of lateral motion is a most essential advantage. Hitherto it has only been got in this country by the arrangement used by Mr. Adams on the North London Railway, by the Bissell truck, or by Adams' radial axle-boxes, which last may be left out of consideration, as we are now dealing with bogies proper. In the Bissell truck the engine is always brought back to the centre position by inclined planes in a way too well known to require explanation, but there is the friction of the wedge to be overcome, and this is often very great, and does mischief. Much force is required to make the truck shift at all, and when it does shift it goes over with a jerk generally too far, and the engine, as a consequence, is unsteady, and wanders. Nothing of this kind can take place with the swing bogie just described, which appears to possess some very admirable points,

A short description will now be given of some other peculiarities of American locomotive engines. We have first a boiler extensively employed on the Pennsylvania Central Railroad, for use with bituminous coal. The principal features are the water grate and the deflector of fire brick, supported by water pipes. The Pennsylvania Central Railway is 355 miles long. The fuel of the line is bituminous coal. The number of engines is 434, and this is the favourite boiler on the line.

Next comes a bituminous coal-burning boiler on the New Jersey Railway. It is fitted with a water grate consisting of

tubes disposed as shown in Fig. 1, and fixed in the following way: The front sheet of the fire box is bored and tapped with a fine thread ten to the inch, into which the tubular bar is firmly screwed. A copper ring, No. 10 gauge, is then forced over the tube — the end of the tube being turned—and caulked on both sides of the back furnace sheet, as shown to an enlarged scale. The outside sheet is fitted with brass plugs cast with 1¼-inch square heads for convenience of taking out. These are removed, and the grates cleaned at the same time as the boiler. The water grates, if allowed to get stopped up or choked by deposit, will curl up and draw out of the fire-box plates. When one is seen to begin to get crooked it may be safely assumed that it is getting stopped up with sediment, and will come out; this, however, seldom occurs. Mr. Headden, the locomotive superintendent of the New Jersey Railroad, states that he has had to take out but three tubes from this cause since he had them in use, and none from any other cause; and he has used them since 1863. The bar tubes for bituminous coal are set ⅞ inch apart, and are in all cases 2 inches outside diameter, ¼ inch thick, and there is no waste of coal by dropping through. The coal does not differ from what we use, being the run of the mine. The ash pans are from 12 inches to 14 inches deep, and made to hold 3 inches of water. They are washed out clean, and fresh water put in every trip. The consumption of fuel per mile run is from 40 lbs. to 55 lbs. The average trains of these engines for passengers are from eight to twelve double-truck twelve-wheel cars. Anthracite coal is, however, the principal fuel of this line, but few bituminous coal burners being used.

Fig. 1.

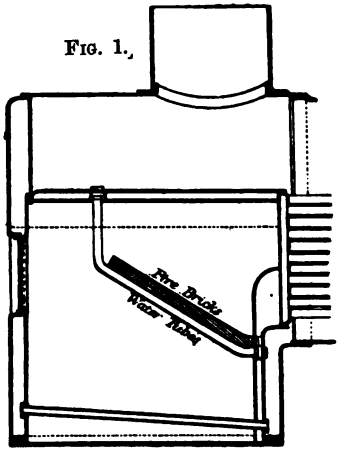

Fig. 2.

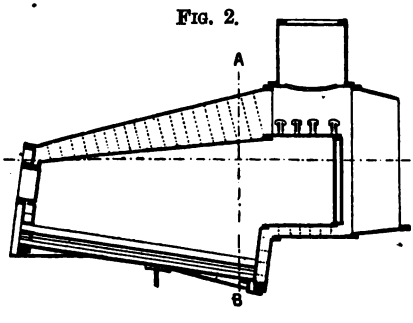

Next we have a boiler known as the camel-back or Mullholland boiler, seen in Fig. 2, and which is suited for either bituminous or anthracite coal, which enjoys much favour. Mr.

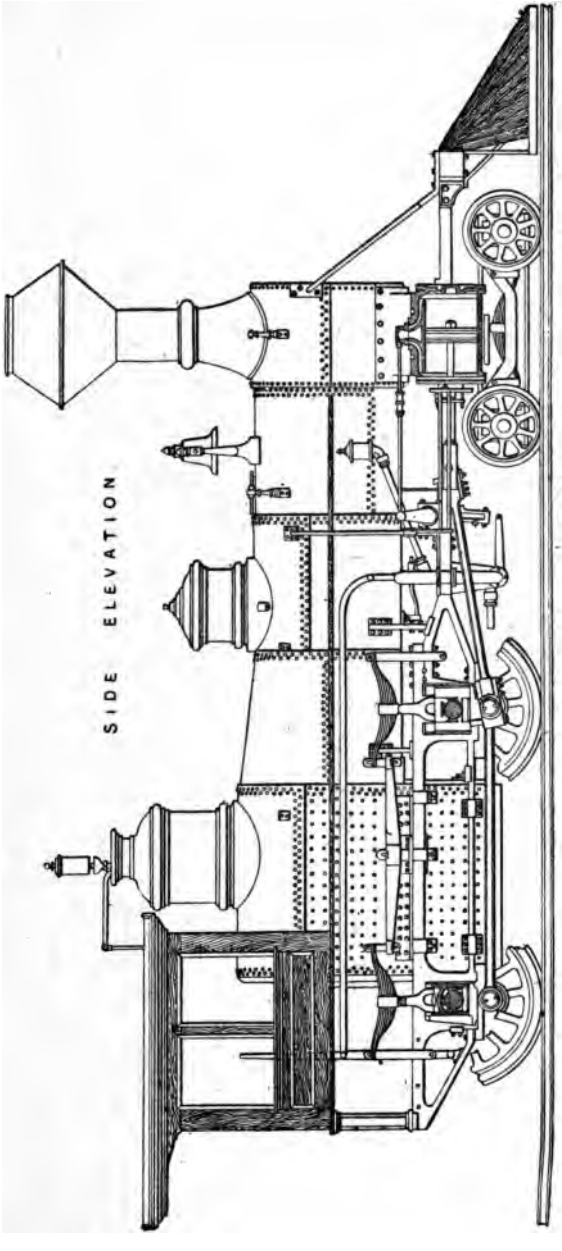
SIDE ELEVATION

Headden has a number of them at work—anthracite burners. The following description of one and its performance will answer for all: — Cylinders 17 × 22, three pairs of driving wheels, coupled, 4 feet 6 inches diameter, and truck, in use since 1864. The weight of engine ready for use is 37 tons, of tender 19 tons; this includes coal and water standing to train with 120 lbs. steam. The consumption of fuel per mile run is 55 lbs.; daily duty 90 miles with not less than 60 or over 100 coal cars; average weight, 2 tons 16 cwt.; capacity, 5 tons and over. Mr. Headden states that he has pulled with one of these engines 127 cars with 727 tons of coals at about eight miles per hour, with 130 lbs. of steam. The grate surface of these engines, although in use since 1864, has cost nothing for repairs. There are three large tube stays through the back of the furnace under the door in the upper and lower row; these are for admission of air and for solid wrought bars, which are drawn out into the tender, and thus allow the fire to fall out. The water-grate bars for anthracite coal are generally set from 1 inch to $1\frac{1}{4}$ inch apart, both in a straight line and in clusters. Anthracite coal is prepared for the engines in cubes of 6 inches. This boiler is rapidly coming into use for all railway purposes. It is used extensively by the Baltimore and Ohio Railway as a bituminous coal burner, and by the Erie Railway both as bituminous and anthracite coal burners, the only difference being, of course, in the grate area.

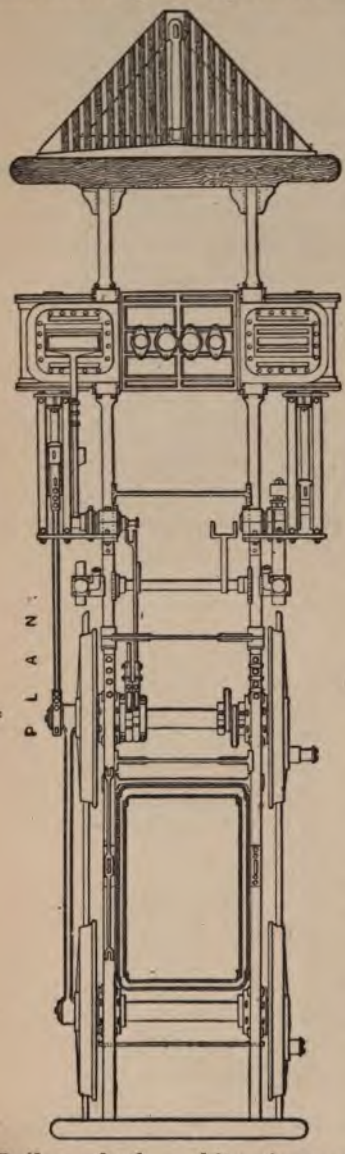

With these particulars, the author begs to conclude this general statement of some of the peculiarities of recent American locomotive practice. He has refrained from criticism as much as possible, leaving that to the members of the Society present, amongst whom are many largely engaged in locomotive practice.

DISCUSSION.

Mr. WILLIAM ADAMS said he considered a great advantage would result from the fusion of the American and English systems of locomotive engineering. In his own practice he had often been indebted for details to the American system. The sand box and the bogie were of American origin. It was an open question whether the bogie was adopted here first or in America, but it was certain that the Americans adopted it before it was adopted in England to any great extent. There were many peculiarities in American locomotives which English engineers had not adopted, and were not likely to adopt, some of which had arisen from accidental circumstances. Take, for instance, the frame of the engine. Originally the bar frame was used to a very great extent in this country. In Berry's engines it was adopted, and answered very well, but as more powerful engines, with larger cylinders, were introduced, the gauge being limited, engineers began to consider where they could save an inch, for the bar system reduced the valuable space within which the working parts of the engine had to be got. Where inside cylinders had been used in this country, the bar frame was not admissible. It was a matter to which Americans attached much importance, and they claimed for it the advantage that it gave a larger amount of elasticity. That might be so, but, looking at the construction of the bar frames, it was difficult to see how it could be elastic. There was a diagonal stay to the smoke box, and a corresponding one at the back of the fire box, besides several diagonal stays at the back of the barrel; so that the boiler of an American engine appeared to be part of the main frame. A bar frame would have comparatively little stiffness, if any at all, if it were not stayed to the boiler. As far as his (Mr. Adams') experience went, he had not had any trouble with flat frames, although made tolerably stiff; their depth gave them vertical stiffness, and, having transverse ties, formed a rigid frame. It appeared to him that the correct principle of getting elasticity was by the arrangement of the springs. He did not see any objection to a tolerably stiff frame, if the arrangement of the stays was such as not to cause the frame to be so stiff that an engine could not stand on an uneven road without strain. The Americans adhered to that system of frame, although there were

inconveniences attached to it, but they doubtless had their reasons for adopting the practice. Another interesting matter was the water tube grate for the anthracite coal. It would be interesting if particulars could be obtained showing the relative economy of coal with that kind of grate and the ordinary description, for it appeared that the water tubes were not well adapted for the purpose, economically speaking, and in practice it was found to be better to have as many air spaces as possible. To prevent stiffness, the tubes must be of large diameter; that seemed to be a drawback. The fact, however, of their being largely used showed that there were advantages. Again, as to the form of boiler in American practice. The fire box was seldom made flush with the barrel. There was no doubt that the straight flush box gave simplicity of construction, but some engineers were of opinion that it gave too great rigidity, and he (Mr. Adams) had known cases of fire boxes of that description being unable to withstand the strains of expansion and contraction caused by the varying temperatures. If the high fire box was advantageous, the American plan would be simple, and the conical form might be worthy of consideration. A great deal depended upon the quality of iron the Americans used, as Mr. Pendred had stated. In England, where the high fire box was used, it was joined to the barrel by an o.g. connecting piece, whilst the Americans used a straight taper piece, which might be more simple than our mode of connecting them, although less elegant.

The cylinders in the American engines were very heavy, and with the saddle pieces would weigh about 2 tons. In addition to that, there was the cow-catcher, which overhung considerably, so that in the American engines bogies were absolutely necessary. The axle boxes had been described, and possessed novelty. There was no brass, but three pieces were dovetailed into the cast-iron axle box. In his (Mr. Adams') practice, he usually removed a good deal of the metal from the crown of the axle box. That caused the crown of the axle box to wear faster, but there was an advantage which balanced the wear, for before that plan was adopted the driving axle boxes were liable to become slack in that direction, and would knock in the brass, and there was no adjustment to prevent it; but taking the metal out of the crown remedied the evil. It appeared probable that the mode of fitting the dovetailed pieces in might accomplish this same result. It was noticeable that there were no water gauges used on the examples of American locomotives before the meeting. It would be interesting to know for what practical reason they had been dispensed with. It was a simple and inexpensive contrivance. The form of chimney shown was unlike that

generally adopted in American practice, being some 5 or 6 feet in diameter. The advantage claimed for large chimneys was, that a large area was obtained, so that it enabled the sparks to be arrested without much resistance.

The construction of the bogie was ingenious, and deserving of attention. He (Mr. Adams) had had no experience of the kind of links shown, but he thought it rather inclined to impart a swinging motion to the engine.

Another interesting subject connected with the paper was the fire boxes. In American practice, mild steel had been used for fire boxes, and it would be interesting to know what had been done with steel in this country. On a great many railways copper had been tried for fire-box plates, but there had been a great deal of trouble with them, and many engineers had been inclined to try steel. It was, however, of too hard a nature, and became brittle. On some of the American railways the test for steel for fire-box plates was to make a piece of the metal red hot, and to dip it into water, and then bend it over perfectly flat.

April 8th, 1872.

JABEZ CHURCH, PRESIDENT, IN THE CHAIR.

EXAMPLES OF RECENT PRACTICE IN AMERICAN LOCOMOTIVE ENGINEERING.

ADJOURNED DISCUSSION.

Mr. P. F. NURSEY opened the discussion by observing that the author of the paper had referred to the substantial benefits derived from the use of bogie engines in America. As the bogie system had also made considerable progress in England, owing to the persistent advocacy of Mr. R. F. Fairlie, he, Mr. Nursey, thought it well to offer a few remarks upon that system. That he would do by the light of some experiments which were carried out at Sheffield a short time since with the most recent example of double bogie engine, and at which he, Mr. Nursey, was present. The engine had just been completed by the Yorkshire Engine Company, and was the fourth of thirteen which were ordered for the Mexican railway. The engine, a sectional drawing and photograph of which were exhibited, was built to the Mexican gauge of 4 feet 8½ inches, its average working weight being 55 tons. It had four 15-inch cylinders with 22-inch stroke. The boilers had an inside diameter of 3 feet 10¾ inches, each being 10 feet 9 inches in length. The two barrels contained together 286 tubes 1⅞ inch in diameter by 11 feet ¼ inch long, and the tube surface amounted to 1547 square feet, making, with 141 square feet of fire box, a total heating surface of 1688 square feet. The fire grate surface was 26·6 square feet. The boilers were placed end to end, with the fire box in the centre, and the engine was mounted on a pair of bogie frames, each fitted with six wheels, 3 feet 6 inches in diameter, the wheel base being 8 feet, and the total base being 29 feet 5½ inches. It was constructed to burn either wood or coal, according to circumstances, coal being obtained at one end of the line on which those engines were to work, and wood at the other. The water tanks had a capacity of 2200 gallons, the coal bunkers holding 30 cwt. of coal, whilst there were fuel ates for 180 cubic feet of wood.

The experiments took place on the 2nd of February last on

the Grange Colliery branch of the Manchester, Sheffield, and Lincolnshire Railway, and were conducted under the personal superintendence of Mr. Charles Sacré, the engineer-in-chief of that line. The branch was a single line nearly 2 miles in length, and was on the ascent all the way from its junction with the main line at Grange Lane, near Sheffield, to the collieries. It had a gradient of 1 in 50 for 1880 yards, and another of 1 in 32 for 396 yards. On the branch were several curves of 7½ chains radius, two series of them forming an S-curve, one such curve occurring on the gradient of 1 in 32. The engine first started to push a train consisting of fifteen waggons loaded with coal, two waggons loaded with pig iron, a passenger brake van, and a goods brake van, giving together a gross load of 241½ tons, or including the engine 299 tons. That was exclusive of a party of engineers and railway officials who were present to the number of about forty, and who might fairly be said to represent about 2½ tons more. The reason the train was pushed instead of being pulled, was to guard against any accident from the possible breakage of a coupling, which would have allowed the detached loaded waggons to have run back on to the main line. The start was made with steam at 120 lbs. pressure, but when the train had nearly reached the summit of the gradient of 1 in 32, and whilst upon the S-curve, the steam fell to 80 lbs., which was due to bad firing-up before starting, and the presence of a number of the visitors on the foot plates, which interfered with the duties of the driver and stoker rather considerably. The brakes were put on, and several of the wheels were scotched, and after a few minutes' delay the steam rose to 120 lbs. again, and the engine started its train without any apparent effort, and took it easily up to the collieries at a regular and steady speed. The engine was then reversed, and the train allowed to drop down the line back to the junction.

After a short delay, during which the engine driver was occupied in setting right an injector which at first would not work, five more loaded waggons were attached to the train, which brought the total train weight to 309 tons 10 cwt., or 367 tons 10 cwt. including engine and passengers. With this load the engine was started on her second run with good fires and steam at 120 lbs. pressure. On the incline of 1 in 32, the steam being well up at 120 lbs., a stoppage was made with the view of putting to the proof Mr. Fairlie's assertion that any one of his engines would always start, under all circumstances, any train that it could draw. After a brief pause the engine was again started, and it pushed its heavy load to the collieries, attaining a speed, before stopping, of about 10 miles an hour. The train was then allowed to drop back down to the junction, and the engine was detached and driven back to the Works, some

4 miles up the line, with the Duke of Sutherland and others, who were desirous of testing what oscillation she might develop at a good speed on her foot plate. She quickly attained a speed of about 35 miles an hour, and as he, Mr. Nursey, was on the foot-plate he could testify to the remarkable smoothness and steadiness with which she ran.

He (Mr. Nursey) considered that the experiment was highly successful; the results attained were all the more remarkable when it was considered that the engine was pushing an exceptionally long and heavy train up steep gradients and against sharp curves. The ordinary load for a six-wheeled coupled goods engine on the Grange Colliery Branch was 97 tons, or, including the tender, 113 tons, the engine itself weighing 32 tons. The friction of a train of 312 tons against an incline of 1 in 32 on an S-curve was unquestionably very considerable, and the propulsion of such a load, under the circumstances stated, could not fail to add further testimony to that adduced by Mr. Pendred in favour of the judicious application of the double-bogie principle. In the example before the meeting weight was converted into tractive force, and exceptionally sharp curves were traversed with perfect ease.

Mr. William Adams observed with regard to the examples of locomotives before the meeting, that in them the roof bearers were placed transversely; he had seen many instances of similar construction, and he thought they had all been failures. On the South Eastern Railway it was customary, when the fire boxes were 6 or 7 feet long to place the roof-bearers transversely to have space to sustain the box. Wherever transverse roof bearers extended across they proved to be failures. He saw, a short time ago, a fire box with the upper corners and edges of the tube plates so placed that the tube holes were flattened to an oval, from something like $\frac{3}{16}$ths of an inch, and it became necessary to remove the fire box plate, although it was good in other respects. It would be useful to know whether the fire boxes before the meeting had been found to answer in practice. The fire box demanded more attention than any other part of the engine, in order to keep the fire box and tubes tight, and he would be glad to know if there were any means in American practice of keeping it tight. There were some brass pieces interposed between the roof and the fire box, and there might be some practical value in that which would remove the doubt.

He would next explain how one of the difficulties of locomotive boiler making was overcome in the locomotive department of the North London Railway. The usual mode of attaching the fire box to the outside shell was by making a solid wrought-iron frame welded up, the thickness of the frame giving the thickness of the water space. At the corners of the frame ther

was a difficulty—the corner being rounded—in getting rivets placed close enough to make a steam-tight joint. In consequence of the angle and the great distance across the corners it was impossible to get the rivets inside so as to support the outside sufficiently. Therefore when a simple wrought-iron ring was adopted, bolts were tapped into it from outside, but it was difficult to make the corners tight in that way, and in order to obviate the difficulty it was customary to have a double corner to the fire box. The frame was carried down double its depth, but the lower part was only half its thickness, and it formed a double seam and secured the double corner of the fire box. The roof bearer was formed of two plates of iron; Lowmoor was generally preferred. The great point in fitting those roof bearers was that they should take a bearing on the two corners of the fire box, the object being to transfer the strain on the middle part to the corners, and it was necessary to insist upon the bearers being properly fitted there. A peculiar point about it was that the bars were made of two plates, and there was no forging about them, and therefore no doubtful places in them. When solid bars were used there was a kind of boss on each side, which involved mechanical skill; but those to which he (Mr. Adams) referred were plain plates fitted in pairs together, with distance pieces inserted at intervals. Another advantage was that there was a better circulation of water, as instead of having a solid mass of iron, there were a number of spaces through which the steam could rise.

Mr. Adams next described the method of forming the seams in the boiler adopted by him. The example shown was a longitudinal seam in the barrel of the boiler. The plate, Mr. Adams observed, was butt-jointed, and inside and outside there were lap-pieces $\frac{3}{8}''$ thick outside and $\frac{1}{2}''$ thick inside. In all cases where the longitudinal and transverse seams met they were thinned down so that the rivets went through both. He adopted one pitch of riveting throughout the boiler, and he decided upon the pitch after having had a series of experiments made by Mr. Kirkaldy. He (Mr. Adams) adopted the pitch that gave the strongest joint with the largest amount of lap admissible ($\frac{3}{4}''$ rivets for $\frac{1}{2}''$ plate). In the barrel seams could be given, but not in all parts of the boiler. In the fire-box corners, if too much lap was given, the seams would be in the way of the joints, in the inside fire box it was necessary to get them reasonably close to the laps.

Referring to the bogie frame, Mr. Adams observed that he placed the weight at the end. Where the bogie was placed, he interposed a ring or washer of india-rubber, which rested upon a block of cast iron, and that block slid laterally upon the bogie frame as the engine traversed curves. The motion was

controlled by springs inserted at the ends of the bogie frame. The object of the india-rubber ring was first to get a flat surface which should keep the bogie frame horizontal when the levels were true; but when the engine was running on a road which was twisted, the india-rubber ring yielded to the condition of the road without throwing any cross strains on the bearing springs of the engine, and it always returned to its normal position. That also took off any jarring, and the rivets which might become loosened were also prevented from jarring. The ring of india-rubber upon which the engine rested was useful in the further respect, that it did away with any metallic friction of the bogie pin. When he (Mr. Adams) first adopted that plan, he placed between the ring and sliding block a cup of cast iron, which was lubricated, and it was intended that it should swivel on the sliding block as the bogie adjusted itself to the curve; but on examination he found that the cup never moved at all, and it had consequently been dispensed with. The effect was that the rubber spring twisted sufficiently to allow the bogie freedom to adjust itself to the proper angle, and brought it back to the right line. The washer was 4½" thick, and the minimum proportion of area was one square inch per cwt. of load; but two square inches to the cwt. was preferable, and with that amount there had been no deterioration of the rubber.

The valve motion of the locomotive was another point for notice. He (Mr. Adams) had tried balanced valves, and hoped one day to see them become a success. The trouble with balanced valves was that when they worked between two faces, the cylinder and the back of the steam-chest cover, they did well while the steam was on, but when the steam was shut off they became stiff. But the trouble was that they drew the dust down the blast pipe and wore out the faces. It might be expected that they would save wear and tear, but the reverse was the case. There was no doubt the pressure was taken off the valve, but they drew down the dust. They checked the speed of the engine when the steam was shut off. Sometimes steam was shut off down an incline, but with the balanced valves the drivers sometimes found they had steam whilst going down the inclines. He (Mr. Adams) was trying Outridge's valve, which appeared to be free from that defect. It did not work between two faces, but there was a kind of false face to which it was attached, and it fell off like an ordinary valve. With marine engines he had never found any difficulty.

Referring to cross heads, Mr. Adams said in his practice he had adopted one similar to the American type. It was formed in one with the motion blocks and cast in steel. A plain steel bush was inserted by hydraulic pressure in the block, and it made a very simple connection. A cast-iron guide was used

for the valve spindle, and it was preferable to any links, as there was more stiffness about it. With regard to the adjusting wedge in American practice, it was common to have a wedge placed both at front and back of the axle box, but it appeared to be only an expedient to get over defects in workmanship to place a wedge at both front and back. It could be easily understood if the locomotive was lined out carelessly, that with the double-wedge arrangement the axle could be adjusted if it was out of the square. But on his railway they prided themselves on the accuracy of their work, and they endeavoured to get it absolutely true with the centre line of the cylinder. The single wedge arrangement he used was very valuable, and would save a great deal of money if it was well attended to; but if it was set up too tight, it would jam the axle box, and the engine would get off the road. With reference to the hornblocks, he had engines which had been running for nearly ten years with a wedge, and they had not cost the Company anything during that time. With the old system of solid hornblocks without the wedge, they had to line them up periodically. The method of lining them up was to cast pieces of brass corresponding with the shape of the axle box, and sweat them on with tin, but when it was done it was at best but an ugly patch.

Another point was the system of axle lubrication. In the North London rolling stock they had lubricators underneath. It was simply a wool fabric, and it was kept up to the surface of the axle by light springs. The oil filled the cavity underneath a brush, which had some cotton fibres communicating with the chamber of oil, and a constant circulation was thus maintained by capillary attraction.

Mr. Pendred, in reply to the discussion, said that Mr. Nursey, in speaking of the Fairlie engines and the experiments made at Sheffield, mentioned the satisfactory results obtained; and as he (Mr. Pendred) was present, he could confirm all that Mr. Nursey had said. He found, however, one or two slight inaccuracies in Mr. Nursey's statement. Thus he gave the average working weight of the engine as being 55 tons. He (Mr. Pendred) found it was 62 tons.

Mr. Nursey observed that Mr. Pendred was correct as regarded the gross weight, but 55 tons was generally taken as the average weight.

Mr. Pendred: Another point in Mr. Nursey's remarks was that he gave the steam pressure as 120 lbs. The result of his (Mr. Pendred's) observation was that the engine was blowing off at 140 lbs. up the incline; and a simple calculation of the weight of the waggons, and the fact that they were pushed round sharp curves and not pulled, showed that the friction was very nearly 10 lbs. per ton. Under those conditions a pressure of less than

126·25 in the cylinder would not have hauled the load, and, allowing for back pressure, this would correspond pretty closely with a boiler pressure of 140 lbs. With regard to water grates, the reason for their use was that when anthracite coal was burned wrought-iron bars would not stand well. They ran down. The heat of anthracite coal was extremely localized. There was a peculiar action in anthracite. As to the thin-plate bars, if he remembered rightly, those grates were put in that extraordinary locomotive in the Exhibition of 1862. One of the great difficulties was that the grate had to be made as close as possible with thin plates, and with ·29 of a square foot per horse-power; a very high temperature and a rapid combustion resulted, which was liable to burn out grates made of thin plates. One mode of constructing thin-bar grates was to make the grates of hoop iron strained tightly in a frame. Mr. Adams and other speakers had entered so fully into the subject on most points of detail, that there remained nothing for him (Mr. Pendred) to add to the very interesting discussion which had taken place.

The PRESIDENT observed that every nation had peculiarities in the construction of locomotives. It was evident that we were indebted to America for many things, and amongst others for the bogie principle. That principle was admitted to be of great value, and there was no doubt its value would in time to come be esteemed even more than it was at the present moment. It reduced the cost and gave elasticity, which was highly desirable in an engine, and it was in itself of great value. Another point of value in considering cost was the nature of the roads. Those on American lines were more elastic than ours in consequence of the large quantity of timber used in their construction, which gave elasticity, and so saved wear and tear in the rolling stock. Mr. Adams, who had had considerable experience in locomotive matters, had given credit to the Americans for their special improvements, and he had directed attention to their weak points of construction. It appeared, as regarded railway management, that the Americans were far behind us in that particular. Again, the question was still open as to the proper gauge, and the adoption of an universal gauge in America. They had three different gauges, 6′ 4″, 5′ 0″, and 4′ 10½″; we were better off in our country, and no doubt the Americans would in time see the necessity of adopting one standard gauge, and that one our narrow gauge. It must be extremely inconvenient at junctions to have several different gauges, as indeed we had found in our own country, where present practice tended to uniformity of gauge, and where the broad gauges were being gradually replaced by the narrow gauge of 4 feet 8½ inches.

May 6th, 1872.

JABEZ CHURCH, PRESIDENT, IN THE CHAIR.

STATE RAILWAYS AND RAILWAY AMALGAMATION.

By GEORGE SPENCER.

In considering the question as to whether our railways would be better or more economically constructed and managed by the State rather than by the present system of individual enterprise, it will be necessary to bear in mind that two antagonistic principles are involved; namely, first, the principle of individualism, which forms the basis of our modern English society, under which system every member of the community, no matter what his station may be, is bound to provide for himself and family all they require by the labour of his head or his hands; and he is not allowed to look to other men or to the State for anything he may require, except in case of extreme want, sickness, or old age, when labour is no longer possible. For mutual protection of the fruits of his labour he is joined in a social compact with his fellow-men under laws made by themselves, and certain of their number are delegated as a Government to execute those laws, to make war or peace, to communicate with other countries, to assist in making new laws, and to take charge of the property which the community entrusts to them to enable them to execute their legitimate functions.

Such is the system under which this old England of ours has become what it is—not yet all that could be wished, but still always advancing to a condition of society where the wealth produced by its members is more and more equitably and equally divided amongst them. This is the system of individualism. Let us now turn to the other and opposite system, which has been variously named, according to the peculiar views of its advocates, association, co-operation, communism, socialism. In a society founded on this principle, and which nowhere exists in a complete form, and perhaps never will, all the wealth created by the labour of the community belongs to and is disposed of by the State, and is distributed to the individuals of the community according to their wants, by a Government appointed for the

purpose by the whole community, and thus private property is proposed to be dispensed with. Such is believed to be a fair statement of these two opposing principles of society; they are essentially antagonistic, and every attempt which has been made to unite them in action has been, and always will be, a failure. That there has been of late years considerable departure from the wholesome principle of individualism, and that this new project of the construction and management of our railways by the State is such a departure, is what is proposed to be demonstrated in the present paper. To show that these views are not singular, but that some of our most eminent statesmen share in them, it may be useful to quote some remarkable words used by Mr. Gladstone at the late dinner of the Institution of Civil Engineers. He said:—"I see a change creeping over the habit of mind of the people of this country with respect to the interference of Government, and with respect to committing to its direct patronage and tutelage many of the pursuits of the people, which may be, and which I think is, in a certain degree, an obedience to the social necessities of the present time, but which, on the other hand, I do not hesitate to say deserves and requires to be watched with jealousy; it is in the growth of individual and local energies, it is in the development of private spirit, it is in the moulding of private pursuits according to the direction that legitimate and national exigencies find for them, and in leaving them free from artificial and extraneous interference, that the secret of the greatness of the country lies. That danger of centralization, which has been a formidable and almost a fatal reality for other lands, has not, I trust, yet acquired serious dimensions among ourselves; but it has, I think, lifted its head, and it depends, gentlemen, upon the wisdom of the English people, and upon their fidelity to the traditions of their forefathers, whether they will take care not to hand over to the executive Government the charge of functions which they can perform much better for themselves." Such are the sentiments of this great statesman, which it is to be hoped will find a hearty response, not only in the minds of the members of this Society, but in those of the entire community.

Keeping the above principles in view, it will be seen that on the individual system the function of production belongs exclusively to the individuals of the community, and not to the executive Government in any degree, and that the manufacture of any article, be it a ship, a gun, a dock, a bridge, a railway, or, in fact, anything whatever, is a departure from the fundamental principle of individualism upon which our English society is founded; all such articles can be produced better and cheaper by competition among individual producers, as experience has

abundantly proved. Besides, if the executive Government of the country be allowed to assume and exercise the productive functions of the individual, by making and managing ships, guns, docks, bridges, and railways, &c., and especially articles such as railways, which are not required for the exclusive use of the executive, but are used by the community at large, it is difficult to see why all the producing functions of the country should not in like manner be assumed by the executive, and thus the socialist principle be introduced in its entirety, and so the whole system of society be changed. By thus pushing the argument to its extreme the absurdity becomes manifest; but the error of any departure, however small, from the individual principle, can be proved, as we shall see further on. It has been advanced, in opposition to the views stated above, that the principle of individualism has been largely and is being daily departed from with complete success in the large commercial operations carried on by companies of all kinds, the railways among the rest. But there is this essential difference between the case of a company managed by men who are engaged in the actual business and trade of the country, and that of a department of the executive Government carried on by men who are for the most part selected rather from some accident of family or political connection than for their fitness for the duties they discharge; a company is in the nature of a partnership of individuals who hold the supreme control over the management and officers of the company, whilst in Government offices the heads of the departments hold the supreme control over all the rest, and all being relieved from the necessity of individual exertion, and leaning on the State for support, by pensions and so forth, lose that healthy stimulus to individual exertion by competition among themselves which makes the real business men of the country what they are.

If we look to the able manner in which the business of our railways is now conducted by a body of men who for their business qualifications may be said to be unrivalled, each one, besides his duties as a director or officer in the several lines, is an example in himself of that individual energy which was spoken of before as being essential to the conduct of business. If you analyze the list of directors, &c., you will find it to be composed of men of all classes and localities. Large landed proprietors, manufacturers of all kinds, shipbuilders, merchants, lawyers, engineers, &c., in fact, men who, by their talents and industry, occupy the first positions in the country, and who possess an intimate knowledge of all the requirements of the districts where they live; and besides, being themselves often large shareholders in the lines they serve, many of them are members of

the Legislature; thus I find forty-eight are members of the House of Lords, or one-tenth of the number composing the House; 124 are members of the House of Commons, or nearly a fifth part of the House. I may state that the directors and officers of the railways in Great Britain and Ireland number 1848; officers of companies, 725; engineers, 211. If we now look into the arrangements by which all this intelligence is brought to bear in the conduct and management of the railways, we find a system perfect in all its details: The chairman and directors, who hold the supreme control; these are divided into the several sub-committees of finance, traffic, permanent way, rolling stock, stores; in fact, all the working details of the company. Next we have the secretary and general manager (a most important officer), engineers of permanent way and rolling stock, traffic manager, and storekeeper, under each of whom are employed a number of clerks, inspectors, and workmen, &c., every man, from the chairman down to the humblest labourer, holding his position only so long as he is able to manifest his fitness to perform the duties and the work entrusted to him; and when at any time he is found to be unfitted to discharge them he is replaced by another, and has no further claim on the company.

Let us return to the system pursued in a Government department; here all the *employés* go in at a certain salary, according to the position they take, quite regardless of their value, and at stated periods are entitled to a rise of salary, whether earned or not by their talents or assiduity; and after a certain period of service they are entitled to a retiring pension, and become a permanent burden on the taxes. Thus every pains is taken to destroy that individual independence and self-reliance which forms so prominent a feature in the individual system. The works such men produce are marked too frequently by incapacity and costliness. If any more were needed to be said on this subject, surely the lamentations of the head of the Admiralty, Mr. Goschen, on the occasion quoted above, on the shortcomings of his department, ought to satisfy anyone that it is to the system pursued by the Government of usurping the functions of the individual producer that the shortcomings and disasters lamented are to be attributed, and that future safety is to be sought in a return to the more rational system of individual production. If we trace the history of those great men who have originated the enterprises which constitute our commercial greatness as a nation, we shall see the working of the opposite principle of individualism; take, for example, the steel and iron manufacture of this country, and follow the history of the men who originated and developed it—Dudley, Yarrington,

the Darbys, Hunston, Cort, Mushet, Beaumont, Neilson, Bessemer, and other great men in these manufactures, and observe the vast proportions which these trades have arrived at in our times by the working of the individual system. Then show me if you can a single instance of a manufacture that has been originated, or even much improved, by the class of men who have lived and worked under the opposite system. If time allowed, it would be easy to show that the same result has been arrived at by the same means in all the great manufactures of the country. The cotton trade with Arkwright and his compeers, with the wonderful machinery invented by similar minds, such as Roberts and his contemporaries; of the steam engine with its small beginnings by individuals, Savory, Newcomen, Smeaton, down to Watt, whose genius breathed life into this machine, and gave a new impulse to manufactures of all kinds, and to steam navigation, and culminating in that grand instrument of civilization—the locomotive steam engine; which, passing through the hands of Trevithick and his compeers, into the hands of the two Stephensons, and the present generation of locomotive engineers, made it possible to establish the grand system of railroads which is now carrying civilization and progress through all parts of the world. We might in the same manner trace the origin and development of all the trades and manufactures of this country: it will be found that all this progress has been achieved by the creative exertion of individual men, not assisted in any way by Government support,—men whom Eliza Cook calls, not inappropriately, "the poets of science."

Bearing in mind the principles and facts stated before, can it be to the advantage of the nation at large that the railways of this country should be taken and managed by the State? The creation of this vast railway system was a grand result, entirely gained by private enterprise; but the carrying on and good management of these vast properties is a much more important matter to the country, involving, as they do, a capital of nearly 530,000,000*l.*, and an annual income of 45,000,000*l.* sterling, with their 9379 locomotives, 28,000 carriages, 255,000 wagons; any mistake in this respect would be a great misfortune to our country. Cases may arise when it would be to the interest of the country, for special reasons, that the executive should assume the productive function. Thus the Post-office and the telegraphs are cases in point. No doubt both these departments would be carried on and managed with more economy by private enterprise than by a Government department, but the advantages of having the business of these two concerns under one management over the entire country is evident, and more than compensates for any loss to the public that ensues. It has been

shown that the men who now conduct the affairs of the railways are men eminently qualified by their position, their habits, and their intelligence, to carry on this important department, to the benefit alike to the public and the shareholders, and that the class of men who are supposed to supersede them are in no way fitted for the task, but, on the contrary, all experience of these latter men, and the routine under which they are trained, leads to the preference of a system which has produced great results for this country, and which will, it is believed, extend those benefits to the whole human race.

With regard to the amalgamation of railways, it is to be observed that all cases of amalgamation may be classed under one of three heads:—First, there is the amalgamation of a small line with a large one lying contiguous. No valid objection can be raised to any of such amalgamations wherever the parties both desire it; there are instances when such is not the case and the lines remain separate, but in general it is found to be to the interest of all parties that an amalgamation should take place. Secondly, there is the case where lines of railways run parallel to each other. These cases are more difficult to decide on, but, if both parties deem it to be to their interest, and it is found not to be detrimental to the public interests, there can be no reason for forbidding their union. Many such cases have occurred; for example, the Great Eastern Railway, which now occupies a large portion of the eastern coast, was a union of several lines of railway which have greatly benefited both the shareholders of those lines and the public; and so in many other cases. Thirdly, there is the case of the amalgamation of two or more lines which run in the same direction; and, in continuation, their case seems less likely to create difficulty, with regard to the public interests, than the second case, because the direct tendency of such amalgamations is to maintain, and in some cases to create, a healthy competition between the several companies, and, by their facilitating and perfecting the communication for traffic between distant parts of the country, benefit the public. It is no doubt startling at first sight to contemplate the union of two large and important lines of railway running over many hundreds of miles, and having an income of millions of pounds; but no danger can result to the public interests if such plans are carefully considered by the Legislature, where all parties interested can be heard and all interests adjusted.

DISCUSSION.

Mr. W. H. Le Feuvre said he could not agree with Mr. Spencer, who objected to the Government having anything to

do with railways. If the railways did not become the property of the Government, they ought to be placed under its control. In many instances amalgamations were going on, but that was for the benefit of individuals, and not of the public. If the Government stepped in, even if they did not take the whole of the lines, they might take up the principal trunk lines. The country would be benefited, and we should see a great many more railways, for more were wanted in the country districts. Mr. Spencer had stated that he thought the working of the telegraphs would be preferable in private hands. He (Mr. Le Feuvre) thought the contrary was desirable, as since the telegraphs had been in the hands of the Government they had proved a perfect success. With regard to the expense of working railways, Mr. Spencer seemed to think there was a greater economy in the present management of railways than there would be if they were worked by Government. This the speaker contended was wrong, as the salaries paid to the officers and servants of any company were greater than would be paid to Government officers. If the Government took the railways into their hands there would be an enormous saving in the item of expenses of management.

Mr. Eames said he thought the time was far distant when the Government would purchase the railways, and if they did it would cause a great stoppage of State affairs. The best persons to manage railways were those who had had experience, and who were properly adapted to the work, and properly paid for their services. He was glad to find that a great concession had been made to the public in the issuing of third-class tickets by all trains, and he thought discussions like the present would have the effect of promoting the interests of the public in this country. With regard to railway amalgamation, if that could be properly and fairly conducted and brought into working order, it would doubtless prove a benefit both to the railways and the public.

Mr. V. Pendred said he was as much opposed to Government taking the railways into their own hands as he was to railway amalgamation. He did not think the public would be benefited by Government taking the lines over, and he ventured to submit that the question of the telegraphs was not a case in point.

Mr. W. Adams said that the main object of the paper was to ascertain the best way of working railways. It was an important question, and involved the consideration of what was best for the public. It was true that in the case of the telegraphs the Government had been far more successful than it was generally supposed they would be. But the machinery of

the telegraph system was very different from the machinery for working railways. The telegraph consisted of instruments and wires, all of which had been perfected up to a certain point, and there was not so much scope for improvement there as there was in some railway machinery. In working railways a great deal depended upon the individual energy and the competition between those who had the management of them in the working out of the various details, and much of our progress was due to that spirit of competition amongst the engineers. For instance, it was a great problem, and one in which considerable advance had been made—how to get cheap railways. Cheap railways brought about a great extension of the railway system. Much, I think a good deal, of railway progress was also due to the competition of the different companies. On foreign railways (for instance those in France), where the Government to a great extent managed them, they were considerably behind us in the locomotive engine. They were not so able to grapple with the question of speed or heavy load, and there did not appear to be so much desire for improvement. In that respect a change, such as the Government taking charge of the railways, would prove detrimental.

Mr. P. F. NURSEY said that for several years past there had been a general feeling on the part of the public that Government should take some part in the management of railways. That question had been discussed rather warmly at different times, notably a few years since, when so many railway accidents occurred through defective signalling arrangements. It was then urged that Government should take up the lines and work them. The matter, however, appeared to him (Mr. Nursey) to resolve itself into a question of legislative interference on behalf of the public rather than one of Government taking up the lines. What was required was a scheme for uniformly regulating the working of the whole of the lines. It would be a positive wrong done to the country were Government allowed to absorb the railway system which had grown out of private enterprise, and which enterprise would thus receive a material check in the country. Government should, however, interfere where necessary on the part of the public, and adjust defective points in railway management and working.

Mr. SPENCER, in replying to the discussion, said, with regard to Mr. Le Feuvre's remarks, he (Mr. Spencer) had excepted the Post-office and telegraphs in his paper as cases which involved no productive matter, and where the loss might be compensated by the Government action being more uniform. With regard [illegible]laries paid by the Government, that question had to be [illegible]ed in connection with that of retiring pensions, which

was the system to which he (Mr. Spencer) objected, and which formed a very heavy item. As an illustration of his meaning he would state a case within his knowledge. It was that of a naval officer, forty-four years of age, and in perfect health, but who had retired on a pension of 270*l.* per annum. That was not an isolated case, but part of the general system, and to which he (Mr. Spencer) objected. If large commercial operations such as railways were placed in the hands of the Government, they would result in a system of pensions. A railway official under such conditions, if he acted upon moral principles —although deficient intellectually—would be certain to rise, and at a certain time to retire with a pension. That was not the system which was wanted for the interests of the country, and, as matters stood, was wholly inadmissible and thoroughly objectionable.

The PRESIDENT observed that the Society was much indebted to Mr. Spencer for his interesting paper. As regarded the question of State Railways, he (the President) could not see that any advantage would be gained by the public in the event of the railways being purchased by the State, except perhaps that the Government would be in a position to obtain money at a low rate of interest, which might enable it somewhat to reduce the present fares. On the other hand, we must not lose sight of the fact that we had a railway capital of nearly 600,000,000*l.*, which had all been raised by private enterprise, and to disturb that great investment would be attended with serious inconvenience. We should jealously oppose any measure that would interfere with private enterprise, as it had hitherto been an important element in our national success, besides which it was very doubtful whether the Government could work the system so well as it was worked at present. Arguments had been used during the evening on both sides, but the majority appeared to be opposed to State interference to the extent of purchase. He (the President) did not think anything had been adduced which could be substantially supported to show that the Government had been more successful than private companies. It was a fact patent to all, that Government had not been so successful in shipbuilding as private shipbuilders. Mr. Gladstone lately stated in public that the people were not disposed to Government interference, and that he himself was opposed to it.

With regard to the question of amalgamation, on looking to the private enterprise of this country it would be found that a well-regulated compact with the railway companies would be most advantageous to all parties concerned. There could be no question that Government had been to blame for many mistakes

made in our railway construction. Before a railway was made the consent of Parliament must be obtained; the scheme was investigated before the Committees of both Houses for the purpose of ascertaining its merits and its probable financial results, and in too many cases they had sanctioned unprofitable, and also competing lines which were not required The average cost of our railways amounted to 40,000*l.* per mile. If we could commence *de novo* we could now construct them at about half that rate, and then, instead of paying an average dividend of 5 per cent., we should be enabled to pay 10 per cent. It was a source of congratulation that our railway property was improving. Dividends were increasing, and third-class passengers could now travel by all trains. That was a step in the right direction, and would largely increase the revenue and profits of railways.

June 3rd, 1872.

JABEZ CHURCH, PRESIDENT, IN THE CHAIR.

ELECTRIC TELEGRAPH INSTRUMENTS.

By E. G. BARTHOLOMEW.

About two years since a paper was read by the author before the Society on Electric Telegraphy, irrespective of Telegraph Instruments. Upon the present occasion it is intended to resume the subject where it then terminated. The object in dividing the subject has been twofold—it is, in the first place, too comprehensive to receive proper attention in the scope of a single paper, and in the second place, the two papers form the natural divisions of that great and interesting subject, the Electric Telegraph. Although the two divisions are essentially distinct, yet in a certain sense there is an inseparable affinity between them, inasmuch as a line of telegraph is utterly useless, however well constructed, without instruments, and telegraph instruments dwindle into mere philosophical toys without the conductor to connect them. In introducing the subject of telegraph instruments, it becomes necessary to make a few observations of a somewhat elementary character, because, except to those whose profession or pleasure throws them into immediate contact with the subject, the very first principles upon which a telegraph instrument is constructed will be new.

A question of a very elementary, but at the same time of a peculiarly pertinent, character, was once put to the author. How is an electric current which is traversing a conductor made to produce a similar signal at any point in that conductor? The correct answer of this question appears likely to solve much of the mystery which even in this advanced age seems to enshroud the subject of electric telegraphy. Irrespective, therefore, of any particular kind of instrument, it may be as well, in as few words as possible, to explain this point. Amongst the fundamental laws by which the electric force is governed is that which regulates the movements of a freely-suspended magnetized needle, when brought within the influence of a conductor conveying electricity. The suspicion that some connection existed between electricity and magnetism may be said to have arisen from the observed

fact that a flash of lightning possessed the power of deranging the magnetism and movements of the compass needle; and in 1820 the Danish Professor Oersted set this point at rest by establishing the fact that a magnetized needle suspended in the neighbourhood of a wire conveying electricity deflected it from its normal position. Ampère followed up the subject, and discovered the law which governs the deflection. To use his own method of expressing this law, he says:—"Imagine a human figure in the direction of a conductor through which a positive current is flowing upwards; the figure will have the north pole of the needle on the left hand, if its face is turned towards it." In order, therefore, to reply to the question just now raised, Ampère's simile may be extended thus:—Imagine several human figures—call them acrobats if you please—standing upright one upon the other, then if each figure face a different needle each will find, under a similar electrical state, a north pole on his left hand. Convert the human chain into a metallic rod, then any number of magnetized needles suspended on the same side of the rod will be deflected in the same direction when a current of electricity traverses it. But the law of electro-magnetic deflection embraces the further facts, first, if the direction of the current be reversed the direction of deflection will be reversed also, other things remaining the same. Secondly, if the position of the needle be changed from the front to the back of the conductor the deflection will be reversed, other things remaining the same (see Fig. 1). The action of a single conductor upon a suspended needle is feeble, but the law just stated enables us to increase the effect by coiling a wire several times round the needle longitudinally, forming thus an electro-magnetic multiplier. We have now, therefore, simply to imagine any number of such multipliers with their enclosed needles forming at different points of the conductor a part of it, and connected in the same order of direction, and we have a true electric telegraph and obtain an answer to the question, "How is an electric current which is traversing a conductor made to produce a similar signal at any point in that conductor?" As this explanation holds good in principle for every form of telegraph instrument, it will not be again alluded to. In order to avoid confusion in their description it is the intention of the author to separate telegraph instruments into two classes, non-recording and recording instruments.

FIG. 1.

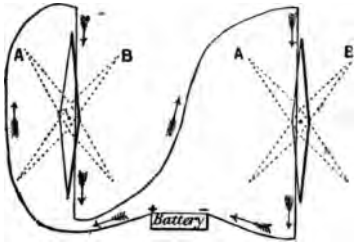

Non-recording instruments:—There can be very little doubt but that the first form of telegraph which came into practical use was the needle telegraph, consisting then as now of the electro-magnetic multiplier and enclosed needle, having a second needle to serve as a pointer fixed upon the same axis with the magnet and brought outside the coil, with the further addition of some mechanical arrangement for easily and quickly reversing the direction of the electric current or shutting it altogether out of the circuit of the conductor. The needle telegraph, simple as it now appears to be, cannot claim exemption from the history of nearly all mechanical contrivances—development and improvement. It was at first supposed necessary that for every different letter required to be sent, a separate conductor, with its own multiplier and needle, and transmitting key, should be provided. The expense of providing such a system was, however, such that it placed a barrier in the way of electric telegraphy, until Cooke and Wheatstone produced an instrument consisting of five distinct needles, conductors, and reversing keys, by the combined movements of any two of which, as will be seen from the diagram, twenty points of visual intersection are obtained, representing as many letters, whilst upon the margin of the dial the numerals are indicated by the visual prolongation of any one of the needles, either to the right or left hand. The practicability of telegraphing by electric agency may be said to have been established by this instrument; but the cost, even in its improved state, prevented its general adoption. It was reserved for the double, and subsequently the single, needle instrument to raise the development of electric telegraphy to that wonderful height it has now attained. Both of these instruments, however, are similar in principle to that already alluded to, and differ only in the mode in which the alphabetical code is constructed, its basis consisting of two elementary signals, the deflections of a vertical pointer to the right or left. In Fig. 2 is shown the double-needle code in use at the present day. The greater simplicity of the double-needle code, the work being divided between two pointers, and the greater ease with which proficiency in its acquirement could be attained, caused the double-needle telegraph, although requiring two conductors or line wires, to be much more generally employed than the single needle, which requires only one conductor; but the march of improvement has changed this feeling, and, by rapid and certain

FIG. 2.

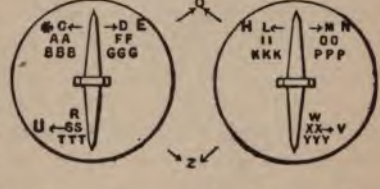

steps, the double-needle instruments throughout the country are becoming converted into single needles, and the two-wire circuits into two single-wire circuits, experience having shown that, with equally skilled operators, one-fifth more work can be accomplished upon two single-needle circuits than upon one double-needle circuit, at an extra cost only of the additional operators. But not only in the number of needles and conductors has the needle instrument been the subject of improvement. The great object in all telegraphs is to obtain a rapid and distinct succession of signals throughout the entire length of the conductor, at a minimum cost of battery power; and in this direction great improvements have been introduced. In the shape and size of the needle, in the character of the wire and insulating wrapper which forms the multiplier, and in the construction of the commutator, or reversing key, improvements have been effected, all of which have tended to increase the rapidity and precision of the signals transmitted. The original form of needle was prolonged and narrow, and its oscillations sluggish; the present form is short and comparatively broad, and its oscillations rapid; the wire composing the helix or multiplier was formerly cotton-covered, the thickness of the insulator necessitating large coils and widely spread helices. The coils now in use are much smaller, and the helices lie closely together, the wire being covered with silk, and the action upon the needle thus correspondingly increased. In the matter of the commutator or reversing key, it is doubtful if any very material improvement has taken place, but this may arise from the fact that the earlier makers of telegraph instruments were better mechanicians than electricians, and the existence of instruments which were constructed twenty-five years since, and are now in working order, is a sufficient proof of the goodness of the work. There are, however, various modifications of the commutator in existence, and the models upon the table will better explain their construction than any attempt at a written description. The author introduced a commutator a few years since in which an effort has been made to combine great strength with simplicity of parts, and it is now very largely employed as a block instrument throughout the kingdom. In it the stretchers or pillars passing from the front to the back of the case serve the threefold function of stretcher, to obviate the effects of warping in the case of support to the line springs, and of conductors to the electric current; whilst the line springs themselves serve the twofold purpose of line spring and tweezer spring, the latter insuring the return of the handle to the vertical position when not in use. The double current key is a form of commutator introduced many years since by [illegible] Highton, which ranks high as a rapidly acting

reversing key. In the handle commutator the movement to right or left of the same handle produces the reverse direction of current, whereas in the Highton key a separate spring has to be depressed to produce the reversion. It is said to be more rapid in action, and this probably arises from the fact that in the handle commutator the handle has to pass from nearly extreme right to nearly extreme left, or *vice versâ*, through a range of about two inches, in order to produce a reversion; whilst in the double key the depression of either key through a space of barely ¼ inch produces the effect.

We will now pass on to that very ingenious form of non-recording instrument, Bright's bell telegraph. In the needle telegraph, the eye having to follow the movements of the needle, it is unable at the same moment to write down the signals which are being received, and hence a second clerk is needed to write the dispatch which the receiving clerk reads off, unless a pause ensues between each word, whilst the same operator writes down the signals. In the bell instrument, the necessity for a second clerk is dispensed with, because the signals being audible, the operator's sight is at liberty for directing his hand in writing. The basis of the code by which the alphabet is represented is the same in the bell as in the needle instrument, two elementary signals produced by the beat of a hammer upon either the right or left hand bell. The distance apart of the bells is sufficient to prevent any uncertainty as to which bell was struck, and this uncertainty is further avoided, both by a difference in the tone and by the manner in which the bell is struck, the one bell being struck with a rebound of the hammer and the other with a dead beat. The commutator employed is usually Highton's key, and being made as a separate piece of apparatus, the bell portion may be placed upon a shelf at some distance from the operator, if requisite, for the convenience of space. As greater force is required to strike a blow upon the bell than to move the needle, a relay is introduced. This useful piece of mechanism, as well as the way in which the hammer is caused to strike the bell, will, however, form subjects for consideration hereafter.

We pass on now to another type of telegraph instrument, the "alphabetical." This exists in two forms, the non-recording and the recording. All alphabetical instruments are based upon the principle of successive electrical impulses, whether following one another in the same or in reversed order, producing a step-by-step movement in a toothed wheel, each step, or each alternate step, corresponding to a letter. It is easy to perceive that a pointer may be caused to revolve, similarly to the hand of a clock, by successive steps, and to point at each step to a letter upon a circular dial, and that this hand or pointer shall be upon

the same axis with a toothed wheel into which an escapement gears; and, further, that the movement of the escapement shall be governed by the force of electro-magnetism. In such an arrangement we have all the characteristics of the indicating portion of a non-recording alphabetical instrument; and if to this be added a mechanical contrivance for rapidly transmitting successive electrical impulses, or rapidly reversed currents, we have an alphabetical telegraph complete.

We will now briefly consider some of the leading details of this form of instrument. An idea of an alphabetical indicator may be gathered from Fig. 3, which represents one of the earliest forms of step-by-step telegraph. In this instance movement of the wheel and pointer is obtained by the attractive action of an electro-magnet upon an armature, one end of which carries a movable catch, which advances the toothed wheel one tooth at each step, carrying with it the pointer. A more certain form of escapement is that in which each movement of the armature backwards and forwards exerts an action upon the toothed wheel similarly to the escapement of a clock, but with this difference, that whereas in the clock the toothed wheel drives the pallets, in the alphabetical indicator the pallets drive the wheel. The arrangement is too familiar to necessitate enlarging upon.

FIG. 3.

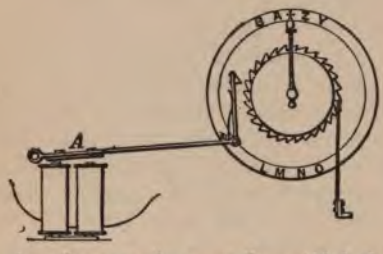

FIG. 4.

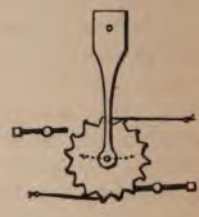

Another and very beautiful form of escapement deserves notice; it is that employed by Wheatstone. In this case the pallets remain stationary, and the axis of the toothed wheel moves, being carried upon the end of the arm, as shown at Fig. 4. The marvellous rapidity and almost unerring precision with which each successive electrical impulse is recorded by this arrangement has never been exceeded.

The commutator, by which the electrical impulses are rapidly reversed, or else caused to succeed each other in the same direction, is an important adjunct to the alphabetical telegraph. In the case of the needle this extreme rapidity is not desirable; ·her would regular reversals be of use, because the repetition

of a current of the same kind is as frequently required as a reversed current. In all step-by-step telegraphs, however, the case is different, because as they never have a retrograde motion, each letter transmitted necessarily follows the last in alphabetical order. Suppose, for example, it is desired to send B after A, as in the word *ab*out, the process is simple and short, because the next impulse produces it; but if it be desired to send A after B, as in the word *b*arrier, the entire alphabet must be traversed; hence the necessity for rapid action in order to gain time. The simplest form of alphabetical commutator, when the electric current employed is voltaic, is Bréquet's. This consists of two broad wheels or drums, from one edge of whose peripheries are cut deep notches, corresponding in number to half the number of letters or signals it is intended shall be transmitted in one revolution of the wheel from zero to zero. The notches are rather broader than the portions left projecting, and in both wheels these notches are cut exactly to the same gauge. The teeth are then fitted into each other and both wheels fixed upon the same axis, one wheel being insulated from the other, both as regards the axis and the teeth. Two brass-tipped springs are brought to bear against opposite edges of the wheel, and so arranged that when one presses against a tooth of one wheel the other is in contact with a tooth of the other. If now one of the half-wheels be connected with one pole of a battery and the other half with the other pole, and a galvanometer—*i. e.* an electro-magnetic multiplier—be placed in circuit with the two springs, it is obvious that each time a tooth changes place with respect to the fixed springs, a reversal of the current must take place and be indicated by the galvanometer; and during each complete revolution of the wheel as many reversals, representing as many letters, will have occurred in the circuit embraced by the springs as twice the number of teeth in each wheel. Outside the wheel is a circle engraved with the letters of the alphabet, and a handle fixed to the wheel serves the double purpose of rotating it and of pointing to the particular letter required. In operating with this transmitter it is only requisite that coincidence should exist between the position of the handle and the needle of the indicator, and so long as this coincidence remains it becomes the simplest operation possible to transmit a message by it. There exists, however, in this instrument a very great liability to a loss of coincidence from the occasional failure of a current, or from the "tripping" of the escapement of the indicator, and this liability to error is common to every form of alphabetical telegraph in which voltaic currents are employed. A more certain form of non-recording alphabetical instrument is that in which magneto-electric currents are em-

ployed. These currents are derived from magnets, as their name indicates, and although it scarcely comes within the province of this paper to describe the sources of electricity, it is yet impossible to convey a correct idea of magneto-electric telegraphs without explaining how the electric currents by which they are actuated are derived, for the act of production is mechanical, and the *modus operandi* is associated with their very construction. As briefly as possible, then, it may be stated that whilst a conductor which is conveying electricity generates magnetism in a bar of soft iron placed near it, at right angles to it—a fact which will be reverted to again immediately—a magnet possesses, under certain conditions, the property of inducing electricity in a conductor placed at right angles to itself. The condition necessary to this development is that a change of magnetic state shall occur in the magnet or the magnetized iron, for it is only during this change that electricity is developed, and the more rapid and marked the change the greater is the amount of electricity induced. If, then, we encircle a bar of soft iron with a helix of insulated wire, a process equivalent to placing a greater length of conductor at or approximating to right angles to the bar, and by the influence of a permanent magnet or other means induce suddenly a magnetic condition in the bar (see Fig. 5), we shall find a marked development of electricity in the helix; and if we possess the means of rapidly reversing the magnetic polarity of the bar, we shall find a reversal of the direction of the electric current in the helix. To accomplish, then, this change of magnetic polarity rapidly has been the aim of those who have sought to utilize magneto-electricity for telegraphic purposes, and various have been the arrangements adopted. One of the earliest forms of magnetic telegraph was that introduced by Henley. The arrangements consisted of a powerful compound magnet, in front of whose poles a horeshoe of soft iron, having helices of insulated wire on its arms, could be made to rotate 'rough a limited arc of a circle, the arc being sufficient to verse the relative position of the poles of the magnet and of e soft iron. The rapid movement of the horseshoe from one sition of rest to the other was sufficient to induce in the lices a working current of magneto-electricity, each alternate ov ckwards and forwards inducing a distinct and ent at the moment of change of polarity. The enerated were received upon an electro-magnet

Fig. 5.

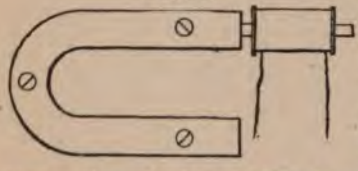

between whose poles a suspended magnetized needle was free to move, and each reversal of current imparted a movement to the needle either to the right or left. Another method of obtaining rapid change of polarity in the iron was introduced by Whitehouse, and was employed in connection with the first Atlantic cable. We have stated the fact that a bar of soft iron becomes magnetic under the influence of an electric current traversing an encompassing helix, a discovery made in 1825 by Sturgeon. This has proved of immense value in telegraphic instruments, and will be again referred to; but the fact is now introduced in connection with the development of magneto-electro currents. Mr. Whitehouse conceived the idea that the magnetism of an iron bar, developed under the influence just stated, being very rapidly assumed by the iron whilst the current is passing, and lost when it ceases, and being, moreover, very rapidly reversed by a reversal of the current, might be made equally available, if not more so, with the magnetism induced in a bar of iron by juxtaposition with a permanent magnet. It is no new discovery that by arranging a second coil over that which produces the magnetism, and keeping it carefully distinct, upon each change of magnetic state in the enclosed bar a current of magneto-electricity is developed in the second coil; this fact was ascertained by Faraday. The current so produced is called the secondary, or induced current, and differs from that in the original or primary coil in the increased intensity it possesses —that is, its power of overcoming resistance. This is a necessary characteristic of electricity suitable for telegraphic purposes. Such a current is called the "electro-magneto-electric" current, to distinguish its source—electro-magnetism. A simple reversing key in connection with the primary coil and battery is all that is needed to produce the currents in the secondary wire. The induction coils employed in connection with the early Atlantic cable were of immense size, and, under the influence of an enormous battery, were capable of producing induced currents far exceeding any hitherto attempted. In addition to their vast intensity they possessed a surprising amount of quantity, an element of great importance in a cable so faulty as the first Atlantic cable proved to be. The value of magneto-electric currents becomes more marked in connection with alphabetical telegraphs. Henley and Whitehouse's arrangements were evidently deficient in the element of speed of reversal, which it has been shown is so necessary in all step-by-step telegraphs. To obtain an increase of speed, instead of the oscillating movement of the coils in Henley's arrangement, or of the reversing key in Whitehouse's, the coils are made to rotate in front of the poles of the permanent magnet, and thus, as is evident, a large

increase of speed is obtained, two currents each of an opposite character being produced at every revolution. But whilst there is an advantage with respect to speed, there is a disadvantage with respect to stopping suddenly. Siemens has somewhat reduced this difficulty by the arrangement and formation of the revolving coil. Instead of a horseshoe having a helix upon each arm, a single elongated coil is employed, enclosed lengthwise in a cylinder of soft iron cut in half throughout its whole length, and magnetically insulated. The cylinder rotates between the poles of a series of bar magnets, cut out to receive it, and at each rotation develops two distinct and opposite kinds of magneto-electricity in the helix. The handle which produces rotation is fixed to a large toothed wheel, which gears into a pinion fixed to the armature, and at each revolution produces thirteen positive and thirteen negative electric currents. The tendency to overstep the desired letter, owing to the momentum of the coil, is reduced by the smaller circle enclosing the helix, and prevented by a series of deeply-cut teeth or notches in the circle around which the handle travels, the handle being hinged and dropped at the right moment into the notch which corresponds with the required letter; the action of the instrument is not, however, pleasant.

Wheatstone has far outstripped all competitors in his exquisitely-arranged alphabetical instrument. He also employs magneto-electric currents. The communicator consists of a box, upon the top of which is a dial plate surrounded by thirty keys or levers pivoted upon and radiating from a common centre, and within the keys is a circle engraved with the twenty-six letters of the alphabet, and other signals. A hand or pointer turning on an axis in the centre of the dial rotates in connection with a handle in the front of the box, and may be stopped at any letter instantaneously whilst the handle is being turned, as it moves only by friction, like the hands of a clock, by depressing one of the keys. The revolution of the handle produces the currents, as will be explained, and the great beauty of the arrangement is that the currents are continuously being generated so long as the handle revolves, although their flow into the indicator and line wire can be immediately checked by the simple depression of a key, and by the arrangement of the wheels just so many currents are generated as the number of letters which the pointer travels over. The magnetic currents are produced as follows:—Inside the box is a fixed permanent compound horseshoe magnet, placed horizontally, carrying on its poles four short soft iron rods, each rod encircled by a helix, and arranged at equal distances from each other in the angles of a square. On an axis passing through the centre of the

circumscribed circle, and connected with the handle, is a soft iron armature fixed just in front of the bars, whose breadth is rather greater than the distance between any two of the adjacent bars or cores; when, therefore, the armature revolves, it approaches one core, which in reality represents a magnetic pole, as has been shown by experiment, at the same time that it is receding from the pole diagonally opposite, and in this manner induces simultaneously in the two coils which encircle them currents in the same direction. A very elegant arrangement is that of an endless chain passing horizontally beneath the levers, and which by the depression of any one of them bulges it out to the exact extent of its slack. As soon, however, as any other key is depressed it removes the slack from the previously depressed key to itself, and in tightening it at that point raises the key previously depressed.

The depression of a key arrests the progress of the pointer at the letter opposite to it, and short circuits all following currents. The "indicator" possesses exclusive points of excellence. Two magnetized steel wires fixed opposite each other upon either side of an axis lie parallel between two small bar electromagnets, the poles being so placed as that when currents of electricity pass through the coils and magnetize the cores, the latter either repel or attract the magnetized needles, imparting a backward and forward motion to their axis. The arrangement of the escapement has been described (see Fig. 4).

The uniformity of the currents generated by Wheatstone's arrangement tends to prevent the tripping of the escapement, and ensures a certainty and rapidity of action unattainable by any other alphabetical instrument as yet devised.

Another form of alphabetical telegraph is that invented by Thompson, in which an attempt has been made to return the pointer to zero after each letter transmitted, and thus prevent the propagation of an error arising from a want of coincidence between the sending and receiving stations. It possesses undoubted merits in conception; but from the amount of clockwork required to produce the various movements, and the great power necessary to communicate rapid action to the type-wheel in its frequent return to zero, it can scarcely be pronounced perfect at present. As, however, it contains elements of value, it may be hoped that the faulty points may be eliminated.

This instrument, being a recording telegraph, belongs strictly to the second class it is intended to describe; but as a more minute description of it is not intended to be given now, its introduction at this point will not lead to confusion.

We must now, however, pass on to a description of recording telegraphs. These may be subdivided into two classes, those

which print by conventional symbols, and those which print in type.

The Morse printer stands at the head of the former class for its simplicity, and is probably the most generally employed telegraph instrument in the world, not, perhaps, in actual numbers, but in the extent of territory over which it is in use. Its elementary principle is easily understood from the diagram. An armature fixed horizontally to a pivoted lever, another part of which carries an adjustable point, is placed over the poles of an electro-magnet. (See Fig. 6.) An adjustable spiral spring tends to draw away the armature from the magnet. When, however, a current traverses the coils of the magnet, the power of attraction overcomes the spring and draws down the armature and moves the point. Immediately above or below the latter is a broad wheel having a V groove cut in it, into which the point enters when pushed forward. By a system of clockwork a strip of paper is drawn at a slow and uniform speed between the wheel and the point, passing through unmarked while the point is withdrawn from the groove, and becoming indented by its entrance into it. The latter action is, however, simultaneous with the magnetism imparted to the cores of the electro-magnet, and the length and periods of the marks on the paper correspond, therefore, with the lengths and periods of electric impulses sent into the coils, these being regulated by the depression of a key at the sending station. The "Morse" alphabet, as the arrangement of signals is termed by which the several letters are represented in this form of recording telegraph, consists of two elementary signals—a dot, corresponding to the depression of the sending key for a period equivalent to one unit of time, and a dash, corresponding to the depression of the key for three units of time. The spaces between the marks are of course produced by the raising of the key, and should be between the component parts of a letter, equal to one unit of time, and between letters equal to three units, the space between word and word slightly exceeding this. A great part of the art of Morse printing depends upon the correct timing of the signals, and is quite as important a feature as a correct sending of the letters.

Fig. 6.

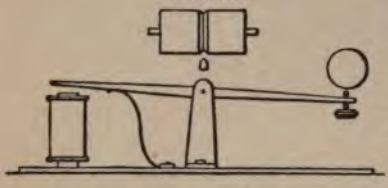

The chemical properties of the electric current have not been overlooked in their application to telegraphy. Many of these properties are well known, and amongst them that of the decom-

position effected by iron when conveying a current in connection with a solution of prussiate of potash. If a sheet of paper be saturated with a solution of prussiate of potash, with the addition of a very small proportion of nitric acid and ammonia, and be laid whilst damp upon a plate of metal connected with one pole of a galvanic battery, and if the other pole of the battery be tipped with a point of iron or steel and drawn over the damp paper, prussiate of iron is formed in the track of the point, and leaves its dark mark on the paper; but directly the circuit of the electric current is broken the decomposition ceases, and the point, although still passing over the paper, will leave behind it no trace.

The construction of a Bain telegraph, called so after the patentee, differs from that of a Morse only in the method of producing the marks. The clockwork arrangement is the same, and the strip of paper, prepared as described, is drawn over a roller having a smooth surface, upon which rests a piece of fine steel spring. The roller is insulated from the arm which carries the point, and the battery circuit is completed between these by the intervention of a key similar to that employed in the Morse instrument. So long as the key is depressed, so long will prussiate of iron be formed upon the paper strip, leaving a trail of prussian blue upon its surface in its movement under the point, and in this manner dots and dashes similar in meaning to the Morse alphabet are produced. Its disadvantage over the Morse lies in the necessity for preparing the paper, which must possess a certain amount of dampness to ensure the passage of the current through it. Its advantage lies in the evenness of pressure of the printing point, which, being always pressing upon the paper, induces regularity of speed, which the alternate pressure and release of the marker in the Morse has a tendency to prevent. Its employment is, from whatever cause, far more restricted than the Morse.

Another and peculiar feature in connection with the chemical telegraph is the perforated slip for obtaining increased speed in the transmission of signals. Dry paper will not conduct electricity. Supposing, then, when the key is depressed a piece of paper be inserted between the contacts, it is evident no circuit will be completed, but if the paper has a hole cut in it, and the pressure of the key permitting it, the paper be drawn along between the contacts until the hole comes between them, evidently at that moment metallic contact will result, and the circuit will be completed, and if the paper be still moved onwards directly the hole has passed beyond the contacts the intervention of the paper will again break the circuit. Upon this principle, then, the perforated slip has been adopted. The

paper strip passes between guides over a perforated table, the perforations being of two sizes corresponding in length to a dot and a dash. Over these are set two punches kept clear of the paper by springs, but made to descend into the perforations when depressed. A step-by-step movement arranges for the motion forwards of the strip after each descent of a punch by the action of keys, and in this manner dots and dashes are cut out of the strip at the will of the operator. When the message is so perforated it is transferred to the sending apparatus, and rapidly drawn through, when marks identical with the perforations will appear on the receiving strip as shown by the diagram. The gain in time lies in the fact that whilst messages are being received at, say station A, another clerk is busy preparing messages there for transmission to B; and, moreover, when a long despatch—for the press, for instance—has to be transmitted, several perforating clerks can be busy upon it at the same time, just like compositors in a printing establishment. Wheatstone has made use of the perforating system in connection with that marvel of telegraphic workmanship and ingenuity, the "automatic" telegraph.

The automatic telegraph consists of three parts—the perforator, the receiver, and the transmitter. It is not intended to attempt a description of it in detail. The strip to be perforated passes between two sheets of metal in which are three small circular holes placed in a line at right angles to the direction of the strip and having three circular steel punches, any one of which can be pushed through the corresponding hole by the action of an eccentric. The centre punch is raised between every movement of either of the other two, and serves by a peculiar movement to push forward the paper one step at a time. The dots and dashes of the Morse are represented by the action of either the right or left hand punch, the holes being all uniform in size. The punching of the paper is effected by pneumatic keys. The perforated strip is led to the transmitting instrument, in which are arranged three rods and three holes precisely similar to those already described. The rods have a constant tendency to rise through the holes, but can only do so when a perforation comes opposite them, the act of rising forming an electric contact by which a current, positive or negative, accordingly as the perforation is to the right or left of the central row, is sent into the line. The impulses are registered by the receiving apparatus and produce dots, some above and some below the central line of receiving strips, corresponding of course with those in the transmitting strip. The speed attained by this instrument far exceeds that of any other of telegraph, and has served the valuable purpose, in the

hands of the Post Office, of limiting the number of wires required for conveying the telegraphic business between busy stations. Over 100 words per minute are readily transmitted by this instrument.

Type-printing telegraphs are all more or less constructed upon one principle, that of a type wheel made to rotate so many points or letters, and then caused to press against the paper strip. However interesting type-printing telegraphs are in themselves, their construction involves much complexity, and it is by no means easy to convey a right appreciation of all their points of detail in the compass of a paper.

One or two distinctive features are, however, worth noticing. The two instruments of this class which are in largest employ at the present time are House's and Hughes'. In House's telegraph the transmitter consists of a contact wheel, which in revolving sends a series of battery currents into the line wire. Each make and break of the current indicates a letter at the receiving station. To effect a certain and rapid stoppage of the transmitting wheel at the right letter a key-board similar to that of a piano is employed, each key representing a letter or other signal. The method of applying the act of depression of any one key to the arresting of the contact wheel at the right moment to correspond with the letter or the key is as follows:—Upon the periphery of the wheel, which is of brass and of considerable breadth, are arranged pegs placed in the form of a spiral around the circumference, the number of pegs corresponding with the number of keys, the extremities of which, when raised by the depression of the finger portions, catch the peg lying in the same place with it, and arrest its progress. Hence each key arrests the progress of the contact wheel in a different position, and as the completed revolution of the wheel produces as many makes and breaks of current as there are keys, it is easy to perceive that a distinctive number of such makes and breaks as correspond to the amount of revolution of the wheel will be produced by the depression of any one key. The electric currents so transmitted are received upon an electro-magnet; the power of this magnet is, however, not brought to bear directly upon the printing mechanism, but is made to act upon a hollow cylindrical slide valve in connection with a chamber of compressed air. The piston moved by the compressed air is in connection with the lever of an escapement which influences the scape wheel of the printing machine. By this means considerable power is gained. Upon the same shaft with the scape wheel is the type wheel, and at its extreme edge are as many teeth as letters, against which presses a steel arm carrying the printing hammer. Whilst the wheel is revolving this arm has

not time to fall in between the teeth, but directly it stops it does so, and by this act prints the letter required.

Hughes' type printer is constructed upon a totally different principle. At all the stations upon the line are corresponding type wheels, which are caused to rotate perfectly synchronously by the aid of a vibrating spring and anchor escapement, the rotating power being obtained from clockwork. The rotation of this wheel is transmitted to a vertical shaft, furnished at its lower extremity with a horizontal arm travelling over a circular disk, on which are arranged contact pins corresponding in number to the types. The pins merely pass through holes arranged around the disk, and are raised by the inner extremities of the keys, which, like House's, resemble those of the piano. Thus for every key depressed a separate pin is raised, and when raised it impedes the progress of the arm just referred to, but does not stop it, as it is jointed. It causes it, however, to mount over it, and in doing this breaks a contact which previously was established, and makes one with the pin. In connection with the arm is a curved-shape spring which follows immediately behind it, and whose function is to press the raised pin on one side, so that if the same key continue to be depressed the arm will not upon a second revolution make contact with it. The type wheel is in connection with the vertical shaft, and the contact being established between the arm and the raised pin, the current then liberated is received upon an electro-magnet, and through the intervention of other mechanism is caused to print the letter. The electro-magnetic arrangement is not the least ingenious part of the arrangement. The ordinary action of an electro-magnet is that of attracting an armature placed in front of its poles when a current of electricity flows through its helices. In Hughes' system the action is reversed. Upon the poles of a permanent magnet are fixed soft iron rods surrounded with helices. These rods become magnetized by induction, and attract an armature fixed to the end of a lever, and having a spring always tending to push it away from the poles. This spring is adjustable, and can be brought to bear with sufficient force as altogether to push it away. It is not, however, suffered to do this entirely, but *almost.* Suppose now a current of electricity be made to circulate through the helices, of such a character as to reverse the polarity already existing in the bars; it is evident that the weakening of the existing polarity will give the spring the preponderance of power over the attractive force of the magnet, and will release the armature. This is caught by a screw passing through a fixed arm, so that it is never removed to any great distance from the poles, and the [illegible] f a lever or eccentric in connection with the train pushes

back the armature upon the poles of the magnet after each successive current has released it.

The effect of this electro-magnetic arrangement is to bring the motion of the armature under the influence of an exceedingly minute current, or what is of more consequence in the attainment of speed, under the influence of the lowest, that is the first and last portion of the electric wave, since all electric currents partake of the character of waves, commencing from a feeble state and gradually rising to a maximum. There is yet another description of telegraph instrument, so entirely distinct from either of the foregoing, that although a non-recording telegraph, it runs no risk of confusion by assigning it a place apart from all the others; the instrument alluded to is Thomson's reflector. The principles of its construction are very simple, its character most ingenious. Inside a small hollow coil is suspended, by a silk fibre, a circular concave reflector, at the back of which is fixed at right angles to the suspending thread a short piece of magnetized steel. By means of an adjusting magnet placed above the coil the mirror is brought into such a position as that the concave surface is directed towards the open end of the coil and there receives a beam of light from some artificial source properly placed. The effect of a current of electricity traversing the coil is to deflect the needle and carry with it the mirror. The beam of light falling upon the mirror is thus moved horizontally either to the right or left, according to the direction of the current received by the coils, and the moving spot of light is received upon a horizontal scale. The effect of this arrangement is to increase very greatly the visible effect of the deflected needle, so that an exceedingly minute current is caused to produce a very sensible movement of the ray. The "reflector," when employed as a galvanometer for the measurement of minute currents of electricity, has proved a most valuable addition to telegraphic apparatus, its sensibility being such that the electricity produced by the muscular contraction of the hand is sufficient to produce a very considerable movement of the spot. Considerable interest attaches to this kind of instrument from the fact that without its aid no intelligible signals would ever have been sent through the first Atlantic cable, and had such not been done, and the feasibility of telegraphing across the Atlantic been thus proved, the probability is that no subsequent cable would ever have been attempted. The signals were read of in a darkened chamber, an ordinary Morse key being fixed by the side of the receiving clerk, who followed the motions of the spot in the depression of the key, and thus conveyed the signals received to a Morse instrument in an adjoining room. Owing to the very weak

currents required to work this form of instrument, it is now exclusively employed in connection with the Atlantic cable. But we must pass on to another class of telegraph instruments, not perhaps so numerous, but in certain positions equally useful —bells. It is necessary in employing a bell, for the sake of the sound produced, that it should be struck with considerable force. The idea of employing the power capable of being developed by electricity, after travelling along an extended conductor, directly in its action on the bell, appears to have been thought impracticable in the early days of telegraphy; and it was not until Walker showed the practicability of it, and employed direct-action bells on the South-Eastern Railway, that clockwork ceased to be the invariable accompaniment of telegraph bells. The previous idea was to employ the power of electro-magnetism for the liberation of a train of clockwork, the increased power of which becomes available for producing a louder blow upon the bell than could be produced upon the electro-magnet itself. Experience has shown that clockwork bells, which require winding up at stated intervals, are liable to fail in consequence of the neglect of not winding up; and this failure is of serious moment when the sound of a bell is depended upon for a signal. Walker's arrangement, which, so so far as the author is aware, was the first of its kind, and the principle of which, notwithstanding all the modifications and improvements since introduced, lies at the root of all direct-action bells, is briefly this:—The armature of an electro-magnet is pivoted near the extremities of one of its longitudinal edges, and attached to the opposite edge is the hammer-stalk, terminated by the hammer. (See Fig. 7.) The bell is adjusted at such a distance from the hammer-head as that when the blow is struck it rebounds by the spring of the stalk, so that the vibration of the bell is not checked. The action of the magnet is to draw rapidly towards itself the pivoted armature, whose motion both ways is limited by adjusting screws, and as action takes place very near the fulcrum, increased speed and a longer range is developed at the extremity of the hammer-stalk, and thus a fair blow is struck, provided the coils and magnet are large and the battery power good. In Bright's bell telegraph this method of striking the bell is employed. Notwithstanding these precautions, however, it has never been found practicable to obtain a powerful blow through any great amount of resistance, and hence those useful appliances—"relays"—have been had

Fig. 7.

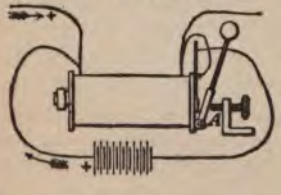

recourse to. The object of a relay is to receive and be influenced by a feeble current, and the only work it has to perform is to complete the circuit between the working magnet or coil and a "local" battery, as it is termed—that is, an independent battery placed at the receiving station. It is obvious that the employment of a relay has one disadvantage, namely, that of introducing an element of failure by the second contact employed. Still, by careful attention to these contacts —removing dust, corrosion, and so forth—relays act with wonderful precision, and are largely employed in many telegraphic operations. As the subject of relays has been unavoidably introduced at this point, it may not be out of place to follow it up, and to describe one or two of those forms of relay which have found favour with telegraphists.

The essential characteristics of a relay are that it shall be influenced by a very feeble wave of electricity, that it shall be rapid in action, and that it shall be certain in making contact. Relays are of two kinds, polarized and non-polarized. A non-polarized relay may consist of a simple piece of soft iron arranged to make contact when drawn towards the poles of an electro-magnet, as shown in Fig. 8. In a polarized relay the armature A is either of steel and magnetized, or it is in itself an electro-magnet. In the case of non-polarized relays a primary current of either kind will alike influence the armature; but in that of a polarized relay only a current of one kind will cause it to make the required contact, because the reverse current instead of attracting will repel it (see Fig. 9). This is in obedience, of course, to the well-known law that in magnetism and electricity like kinds repel each other, and unlike kinds attract; that is to say, the north pole of one magnet will repel the north pole of another magnet, whilst it will attract the south pole. In the case of a non-polarized relay, and also in that of some forms

Fig. 8.

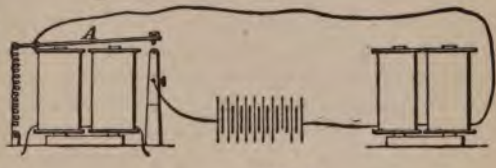

Fig. 9.

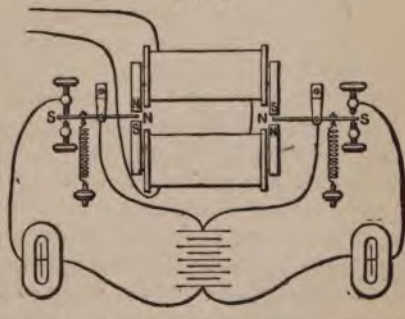

of polarized, the movable part is prevented from making contact, except when desired, by the action of a spring; whereas in a polarized relay advantage may be taken of the inherent polarity of the movable portion to restore it to its normal position as soon as the influencing current ceases. This arrangement is more sensitive than a spring.

Varley's relay consists of a long hollow coil made in two lengths, between the junction of which is a pivoted bar carrying a long soft iron rod, which lies in the length of the hollow of the coil and projects beyond sufficiently far to be available for making and breaking contact with the local battery, and working between the poles of a permanent magnet.

In Whitehouse's relay a small horseshoe permanent magnet is pivoted upon an axis passing through the curve and parallel with its arms. The magnet is placed between the poles of the electro-magnet, and is adjusted to its normal position by a second permanent magnet moved by a tangent screw or other means. The adjustment is thus very delicate, and the action of the electro-magnet upon the horseshoe considerable, since both poles of the one influence both poles of the other.

Hughes' relay, which has already been explained, has proved to be the most sensitive of any form hitherto tried. Returning to the subject of bells, it occurred to the author that the ringing magnet in a direct-action bell might be made use of as a relay magnet also, thus avoiding the expense and complicity of a separate electro-magnet, and securing other advantages which will be pointed out. The result of experiment has been to produce a direct-action bell which gives a far more powerful and rapid blow than that obtainable as yet by any other method with the same amount of battery power. The method will be best understood by reference to Fig. 7. The object has been to utilize the line or sending current, making both it and the local current act upon the same magnet, whereby the magnetism developed is increased. It was at first found that when the sending key was very rapidly raised, after having been depressed, the closing of the line current before the magnetism has entirely left the cores of the electro-magnet had a tendency—if the relay were very finely adjusted—to draw back the relay again, and thus produce a second contact. Tracing the causes to the residuary magnetism of the cores, a magnetism which disappears after the lapse of the fraction of a second, the author has arranged a simple locking arrangement which is put into action by the armature at the moment of striking the blow, and which retains the relay immovably in a position in which it cannot make a second contact until the hammer has fallen back to its position of rest, and this period is found

to be amply sufficient for the complete demagnetization of the cores.

Another form of electrical bell is that in which a rapid succession of blows is struck upon the bell, the reciprocating action of the armature being automatic, and continuing either so long as the key is depressed or until stopped by the attendant. The simplest form is the ordinary trembling bell, the connections of which are shown in Fig. 10. The principle of its action is that of self-make and break. The circuit is completed through the armature itself whilst resting against a spring which follows up the armature for a short distance on its passage to the magnet. As soon, however, as the armature is drawn beyond the point of contact with the spring the circuit is broken, and the magnet then ceasing to attract, the armature falls back upon the spring and re-establishes the connection, and thus an exceedingly rapid trembling motion is communicated to the armature and hammer attached.

Fig. 10.

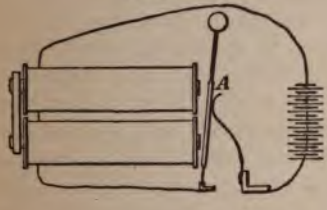

Fig. 11.

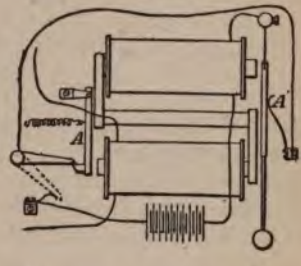

A trembling bell, known as the "Ragon," was introduced from France some years since, and seemed likely to prove a good bell for railway purposes; but, in common with other forms of "tremblers," it has fallen somewhat into disuse, the single-stroke bell being preferred. The Ragon is shown in Fig. 11. Two bar electro-magnets are connected at opposite extremities by an intermediate bar of soft iron, forming thus a letter S. One of the bar magnets is wound with fine wire, and receives the line current, and the armature then attracted liberates a lever which, in falling, makes a contact which completes the circuit with the local battery and the other bar electro-magnet, the latter being wound with larger wire. This is the ringing magnet, and acts upon a trembling armature, which continues to vibrate and strike the bell until the lever is raised to its position on the armature of the line magnet. Upon the same axis with the lever is a metal plate, or disk, labelled

"CALLED," and is seen, when the lever falls, through an opening cut in the case. An objectionable feature in the Ragon is the employment of bar magnets to produce the movements, because the attractive force they exert is considerably below that of the two-pole or horseshoe magnet.

The author may be permitted to describe a trembling bell he designed, to produce the same results as the Ragon, and to avoid the objections. In this bell, called the "double-action" bell, two bar electro-magnets are placed side by side as in the horseshoe, and at either end is an armature, one fixed to a pivot, the other to a spring (see Fig. 12). When either of these is pressing against its opposite poles, it connects these poles and converts the system into a horseshoe whose poles are towards the other armature. Thus by pressing alternately one armature and the other against its opposite poles a horseshoe is formed in opposite directions. The normal position of the bell is when the trembling armature—that is, the armature attached to the spring—is pressed against the poles. In this state the pivoted armature is prepared to receive the effect of the line current, which, when it enters the magnet, attracts that armature and releases a lever, which, in the act of falling, pushes forward a rod, passing through both armatures, and by means of an adjustable stud pressess the line armature against the poles and releases the ringing armature, making, in its release, contact with the battery spring. The raising of the lever draws back the rod, a second stud upon which forces the ringing armature against its opposite poles, and releases the line armature, placing it again in the position to receive the next line current. Another class of bell is that in which a very limited amount of clockwork is introduced, with the sole object of increasing the force of the blow; the objection to the necessity for occasionally winding up the train being got over by an arrangement in connection with the ringing key, by means of which, every time the key is depressed, a certain amount of spring is wound up. The tendency to over-wind is met by an ingenious contrivance connected with the main-spring. The outside end of this, instead of being firmly attached to the barrel as usual, is riveted to a second piece of spring, presses forcibly outwards against the barrel, and ensures sufficient friction to drive the train, except when the spring is fully

FIG. 12.

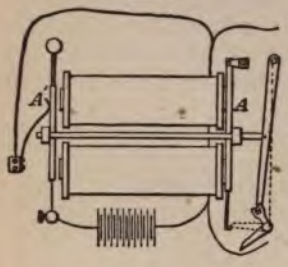

wound up; it then slips, until by consequent expansion the friction spring regains its hold upon the side of the barrel. The objections that have existed to this form of bell have been greatly reduced in a recent arrangement.

The limits of this paper will only permit of a brief reference to telegraph "switches." These useful instruments are employed for diverting the course of a current, for putting a divided circuit "through," or for dividing a through circuit. A telegraph circuit is "divided" by connecting the conductor with the earth at the required point of division. The general character of a switch is that of a spring, or a lever influenced by a spring, which may be pressed down by a cam fixed upon a barrel standing above it, and which, when released by the removal of the cam, will rise against an insulated stud. In such an arrangement, if the conductor find its continuity through the spring and the stud, and if the barrel and cam be connected with earth, when the cam is upon the spring it will place the spring in contact with earth, and all currents arriving at the spring will pass to earth. The wire connected with the stud, being released from the spring, will, however, cease to convey any currents. The course adopted is therefore to place two springs side by side as shown in the diagram, each spring pressing normally against opposite studs. The barrel possesses a cam long enough to press down both springs at the same time, and being composed of metal, will connect the two springs together when down. In this arrangement, suppose each spring to go to line through an instrument, and the studs to earth, when the cam is off the spring the circuit is divided, but when it is upon them it has removed them from the earth studs, and connected them together through the cam. If, on the contrary, the studs are connected together through an instrument, and the cam goes to earth when the springs are up, the circuit is through, and when down it is divided. Switches are made much more complex than the kind just described, but the principles of their construction are similar to that alluded to.

There are other matters of interest in connection with telegraph instruments, but it is not possible in the limits of a paper to enter into them. They are rather points of detail, as for instance the precautions adopted against the effect of lightning upon the coils, the various forms of needle coils themselves, the methods adopted for employing soft iron needles with magnetism induced in them by juxtaposition with permanent magnets, and the various forms of apparatus for testing for faults on lines, testing the quality of the wire, the resistance of the coils, and so forth; but the aim of the author has been rather to describe

the general principles upon which telegraph instruments are constructed.

The author has also avoided all reference to batteries. They form a subject of themselves, and although of essential importance in connection with telegraphs, it would have been foreign to the title of the paper to have introduced them in connection with it.

October 7th, 1872.

JABEZ CHURCH, PRESIDENT, IN THE CHAIR.

ELECTRICAL BATTERIES.

By E. G. BARTHOLOMEW.

Upon two previous occasions the author has brought before the notice of the Society two portions of the subject of electric telegraphy, *viz.*, the line or conductor, and the instrument. The author, however, feels that were he to omit the third part—the battery—he would be leaving the subject not simply incomplete, but shorn of one of its most essential elements.

The author has always regarded it as an apt illustration to draw a parallel between the electric telegraph and the steam engine. Most people have some acquaintance with the principles of the steam engine—what it is, and how it is constructed; whereas comparatively few have a clear conception of what an electric telegraph is, and how it is constructed; and it therefore appears to the author that some at least of the difficulty of the subject may be removed by the comparison. Following up this idea, the conductor may be compared to the steam pipe; the one conveys the electricity from its source—the battery—to act upon the instrument; the other conveys the steam from its source—the boiler—to act upon the engine. Again, the instrument will bear a strict comparison with the engine, for both are mere machines constructed in such a manner as to be best influenced by the power conveyed to them. There then remains, in either case, the source of power. Now, what a steam engine would be without the boiler—a mere combination of inert pieces of mechanism—the electric telegraph would be without the battery. For this reason, it has been thought that the battery forms a subject worthy of a separate notice.

The progress of telegraphy may indeed be regarded as dependent in a large degree upon our knowledge of the battery; and we may consider the great number of forms and constituent portions of which batteries are comprised affords a conclusive proof that the importance of the subject has not been overlooked. Few scientific subjects permit us to trace their rise and progress with that degree of minuteness and accuracy that electricity does,

and particularly that branch of the subject which is at present before the Society—galvanic or voltaic electricity. Comparatively of recent birth as a science, we are left in no doubt as to the fact that but little more than a hundred years since the very existence of such an agent was unknown, nor was any very considerable progress made in discovery until a much later period. It is true that Sir H. Davy added to our stock of knowledge upon the subject, but his were rather investigations into the effects of the pile than attempts to modify its character; and we are not wrong in asserting as a broad fact that the improvements in batteries which have characterized late years are due in a great measure to the inefficient forms of batteries which existed, and to the necessity which electric telegraphy created for a moderately powerful battery, but, above all, one of a very constant kind. It is not, however, intended to enter into a history of the science of galvanic electricity, but to state briefly some of the leading features of the battery, its principles of construction, and the laws by which the force generated is governed.

The identity of electricity, from whatever source derived—whether from the friction of certain substances, from evaporation, from the chemical action set up under certain conditions, from magnetism, or from heat—is not doubted. It may differ in degree but not in nature. If it be true, as has been asserted, that when we eat an egg with a metal spoon we generate electricity, the electricity so evolved will be identical with the flash which rends the oak. But certain substances, and certain combinations of substances, afford greater facilities for the development of the force than others, and it has been a part of the study of the modern philosopher to ascertain by what means the greatest amount of electrical force can be obtained at the least possible cost. Our subject has nothing to do with frictional or static electricity, it is a subject with which telegraphists are not concerned. The well-known story of Galvani's accidental discovery of a force hitherto unsuspected requires no repetition here; nevertheless we are bound to ascribe to him the honour of finding that certain metals when converted by a fluid would develop electricity; and when Volta subsequently produced a real battery by examining the laws of production and multiplying the combinations, he only followed in the path his predecessor had indicated.

The simplest voltaic combination is that in which two metals, as copper and zinc, having different affinities for oxygen, are immersed in a liquid capable of oxidizing one of them. Under such conditions a current of electricity is generated upon the surface of the most oxidizable, and passing through the liquid is

given off at the other metal; and if a wire connect the two plates the current will continue to flow through it from the receiving to the generating plate so long as the necessary conditions are fulfilled. The fact that electricity is supposed to be evolved in the generating plate, but instead of being developed there passes through the liquid to the receiving or collecting plate, and is there given off, has procured for the latter the name of the + pole, whereas the − electricity remaining accumulated upon the surface of the generating plate has caused it to be termed the − pole. It must not, however, be lost sight of that the actual starting point of the + current is at the zinc or − pole. The expressions + and − will, therefore, require no further explanation.

As every metal has its own peculiar affinity for oxygen, so the various combinations of metals capable under the conditions just stated of developing electricity are numerous. It has, however, been ascertained that those metals or substances which differ most in their affinity for oxygen will form the most powerful combination. The order of the substances is as follows:—Graphite (carbon from gas retorts), platinum, silver, copper, iron, lead, tin, zinc. Hence a combination of graphite and zinc forms a powerful battery, and, as both substances are comparatively cheap, this form of battery is of frequent occurrence. The great desiderata in a battery required for telegraphic purposes are its ability to overcome R (or resistance) and its constancy in action. The power a battery possesses of overcoming R is called its electro-motive force. It has been stated that the difference of affinity for oxygen becomes a test of the value of substances as forming the elements of a battery, and this is correct so long as the liquid in which they are immersed remains the same. But some liquids act differently upon different substances, and, therefore, the order in which they may be most advantageously combined will differ according to the liquid employed:—*e.g.*, by a reference to the list it is seen that copper stands higher upon the list than iron, and provided the liquid employed is dilute acetic sulphur or a solution of chloride of sodium, that is its correct position; but if a solution of a salt of ammonia be used the order must be reversed.

There are two distinct characteristics in a battery dependent upon the order in which the same combinations are arranged:—*e.g.*, if one pair of large plates, say 12 inches by 12 inches, be employed, the quantity of electricity generated will be considerable, although the electro-motive force will be small. If, however, a similar pair of plates be cut up into 144 pieces 1 inch by 1 inch, and the 144 combinations be so arranged in 144 separate cells as that the − plate of the one be connected with the + plate

of the next, and so on throughout the series, a battery is then obtained possessing 144 times less quantity, but 144 times more electro-motive force. Its latter property is termed its tension, and is applied to the entire series, the electro-motive force being more strictly applied to the specific energy of each combination. Knowing this fact, it becomes easy to utilize to the utmost the materials at disposal for the particular object needed.

In speaking of the tension of a battery it is usual to refer to the difference of tension between the extremes or poles, and to call one +, the other −, and these characteristics do really exist at the poles, although no conductor may unite them. Indeed, if a conductor connects them the polarity is destroyed for the time, although constantly reproduced by the chemical action; there is a continuous flow of electricity from one pole to the other, and in this lies the great difference between galvanic, or dynamic, and static electricity. It has been stated that the tension of a battery is increased by the number of combinations connected together in series; its quantity, however, remains the same as that of one only of the combinations in the series. This may be explained as follows:—Assume the tension of a single pair of plates to be T when connected in series, that is + of one lot to − of another, the tension of each being T, the tension of the first pair passes on to the next, and adding its own tension to that of the second, the result is 2T, and for any number nT; the size of the plates remaining, however, the same, there is no increase of quantity. But if all the + plates are connected together and all the − plates no increase of tension results, but we have nQ − Q, being the quantity in each pair. The effects of Q and T are different in some respects. If it is desired to obtain heat we retain large plates, because Q being large, the conductor cannot convey the whole, and the endeavour of the electricity to force its way through produces heat. The inability of a conductor to convey all the electricity may result from three causes; a low specific conductivity in the material composing the conductor, a small sectional area, or a very large conductor. If, however, it is desired to overcome resistance, it becomes necessary to diminish Q and increase T. Thus the electrician has at his disposal the means of suiting his battery to the requirements of the case.

A desirable object in all voltaic combinations is to utilize all the electricity developed. If a plate of pure zinc and a plate of iron be immersed in dilute acetic sulphur, no chemical action will ensue unless the plates are connected, but if they touch, either directly or through the medium of a conductor, action immediately ensues on the surface of the zinc, a copious discharge of hydrogen bubbles escapes from it, and gradually the metal is dissolved, sulphate of zinc being formed. Stress has been laid

upon the necessity of the zinc being pure, but pure zinc is difficult to obtain; the zinc of commerce is always more or less mixed with foreign substances, and, if impure, an action is set up locally upon its surface irrespective of its connection with the other plate, because a number of small galvanic circuits are formed upon it, and the result is the rapid consumption of the zinc, without any beneficial result. This local action must be carefully guarded against, and in order to do so it is usual to amalgamate the zinc with mercury: by this means the foreign and detrimental particles are covered, and the surface rendered homogeneous.

The action within the cell of a battery may be briefly explained thus:—When the current flows through the liquid from the negative to the positive plate the water with which the acid is diluted becomes decomposed, the oxygen upon being set free uniting with the negative plate, forming an oxide which the acid converts into a sulphate, the hydrogen being set free in bubbles, not however until it has reduced some of the sulphate of zinc into a metallic state, which, unless prevented, forms upon the surface of the copper and thus gradually converts the battery into one in which the two surfaces are similar, and therefore inoperative. There is yet another action set up in a battery under certain conditions, and it is due to the hydrogen which is set free. This gas passes over to the copper, and has a tendency to adhere to it; it is then found to alter its electrical state, and it becomes polarized. These two sources of deterioration, the deposit of zinc upon and the polarization of the copper, must be prevented in order to render the action of a battery constant. The method by which these objects is best effected is due to Daniell, and hence a battery in which the arrangement is carried out is called a "Daniell." It consists of a porous diaphragm interposed between the two metals, and having a strong solution of a salt of the metal itself upon that side of the diaphragm in which the copper plate is placed, together with some of the undissolved salt in crystals. By this means a constant electrolytic action is maintained, which resolves the salt (sulphate) into its constituents, the metal becoming deposited upon the plate, which hence always retains a surface perfectly clean and bright.

A battery so constructed presents the following action, so long as a conductor unites the two metals:—The zinc is attacked by the acetic sulphur, the water of the solution being decomposed; first oxide and then sulphate of zinc is formed, the hydrogen passes to the copper, decomposes the sulphate of copper, and deposits it in a metallic form on the surface of the metal. At the same time the acid constituent of the copper and sulphate passes to the zinc and continues the action upon the metal. The

whole of this action ceases directly the connection between the plates is broken. From what has been stated it is evident that the development of electricity under the conditions named is obtained at the expense of the zinc and the sulphate of copper; and in order that this development shall be continuous a supply of the sulphate of copper in crystals must be maintained, for if this ceases the sulphate of zinc, which in small quantities is always sure to pass over into the copper side of the diaphragm, will become deposited upon the copper, one of the sources of error which it has been stated must be avoided. Other precautions have to be observed in the maintenance of uniformity, and in the development of the greatest amount of electricity, but those stated are of the greatest moment.

Passing from the Daniell to other combinations for the development of electricity, the Smee battery deserves special notice. In this battery a plate of amalgamated zinc is immersed in the same cell with a thin sheet of silver, upon the surface of which a coating of platinum is deposited by electrotyphy. No diaphragm is required in this battery, and the liquid employed is acetic sulphur diluted with water in the proportion of about 12 to 1 of acid. The platinum is deposited in a finely divided state, and presents a number of points which facilitate the passing off of the hydrogen. This battery is very energetic when the plates are connected after a period of rest, but for continuous action it is feeble. Where great energy is required the Grove battery becomes the most valuable of all combinations. In this arrangement amalgamated zinc and sheet platinum are employed, separated by a porous diaphragm. The zinc stands in a strong solution of acid sulphur, and the platinum in pure nitric acid. The action is as follows:—The hydrogen element of the decomposed water instead of passing over to the collecting plate and forming upon its surface, is entirely suppressed by the nitric acid, which becomes slowly deoxidized and converted into nitrous acid, which passes off in dense red fumes. This is a serious drawback to the use of this battery.

The Marie-Davy battery, which for a long period was extensively employed on the Continent, consists of zinc and carbon, and the liquid employed is a solution of the white crystalline bisulphate of mercury. Its tension is high, being at twelve to eight of Daniell's. One of the most valuable batteries for telegraphic purposes, where a constant current is not required, is the Leclanche. It consists of a zinc rod placed in a solution of common chloride ammonia—sal-ammoniac—in which stands a porous pot containing a piece of carbon surrounded by a mixture of gas carbon and a peculiar form of peroxide of manganese broken into small pieces, but separated from any powder. When

the battery is in action chloride of zinc is formed, which is soluble in sal-ammoniac, the peroxide of manganese is reduced to an oxide, and ammonia is formed. When the sal-ammoniac has become nearly removed from the liquid, it cannot dissolve the chloride of zinc, and the liquid becomes milky; more of the salt must then be added.

In a battery consisting of many plates in a series all the plates should be of the same size, and all the cells in the same condition, as one faulty cell will not only rob the entire series of the value of itself, but will injure the action of the whole. Every cell of a battery should therefore be periodically tested separately, and if the quantity of any one cell be less than the average of the others it should be rejected or remedied. The battery itself, although the source of power, yet possesses resistance to the passing of its own current. The resistance of a battery may be measured by the following method:—Connect a tangent galvanometer in circuit with the battery to be measured, and by means of a shunt reduce its deflection to, say, 30°, which note. Then add more resistance to the circuit until the deflection is reduced to one half—in other words, double the resistance of the entire circuit. Then measure the R of the circuit without the battery, and deduct it from the R last added; the remainder will be the R of the battery:—*e. g.*, let the R of the galvanometer in the first instance be 40, then if an extra R or so be required to value the deflection, the R of the battery will be 40.

Any allusion to other sources of electrical force available for telegraphic purposes, as for resistance magnets, has been avoided, reference having been made to them in a previous paper read by the author before the Society. It is only necessary to add that as the battery is one of the great elements of expense in the maintenance of a telegraph, any form which reduces the cost without detriment to its efficiency is desirable. Batteries are required for various purposes. In block signalling a constant current is required, and the battery wastes more rapidly, the cost of maintenance being in a well-constructed battery proportionate to the work done; whereas others require only to be used at intervals, and to display great energy for a brief period.

DISCUSSION.

The PRESIDENT opened the discussion by asking Mr. Bartholomew if he would state the cost of maintenance of the different batteries enumerated in the paper. The specific powers of the various batteries had been given, and he (the President) believed such information would be very valuable to the Members.

Mr. CARGILL observed that there was one point which struck him during the reading of Mr. Bartholomew's paper, and that was with reference to the theory of the passage of electricity along a conductor. The author of the paper had compared the conductor to a steam pipe; but he (Mr. Cargill) believed there was no proof of the actual passage of electricity. If water was put into one end of an inclined pipe, it could come out of the other end, and thus there was a tangible proof of its passage; but no one knew what electricity was. As to the notion that there was conveyance of electricity from one part of a wire to another, there was not sufficient evidence to show that such was the case, but that was the idea commonly entertained, and which he (Mr. Cargill) thought ought to be got rid of.

Mr. KERSHAW said he thought it was understood that as regarded the flow of electricity, everything was charged with it; and whether a wire was one inch or a thousand feet in length, the same electrical condition prevailed throughout it. He (Mr. Kershaw) believed if it was overcharged, its normal state was upset.

Mr. LATHAM said he believed that it was simply like a pipe charged with water. It was the water that was first put in that was discharged first. If a wire was charged with electricity, if the electricity was led to the further end, more electricity must enter to restore the balance, and from whence was that balance restored but from the battery which gave the electricity? and the particular increment first passed in at one end would first pass out at the other.

Mr. KERSHAW said that if a person stood on an insulator, and took hold of the conductor of an electrical machine, a spark could be drawn out of any part of the body, the body being charged with electricity by connection with the machine, and it was the same with a wire.

Mr. LATHAM asked the author of the paper if sand was not largely used in galvanic batteries, and if it had not the effect of preventing the deposit of metallic salts being transferred from one plate to another.

Mr. FIELD wished to know which battery was preferred for postal telegraph purposes.

Mr. J. H. ADAMS asked in what way the electrical condition of the atmosphere disturbed the action of the wires, or the current through them.

Mr. LATHAM observed that the author of the paper had stated that the el[illegible]ty of the atmosphere and the galvanic fluid were alik[illegible] Mr. Latham) disputed that, from the fact of its being [illegible] that electric fluid generated in the atmosphere w[illegible] rough a non-conducting substance to the

earth, whereas the galvanic fluid would not; hence on most lines of telegraph provision was made in the event of atmospheric electricity striking a wire, by passing wires down the posts to the earth, and the wires were protected by a non-conducting material, the atmospheric fluid passing to the earth, whereas the ordinary galvanic fluid would pass on its circuit.

Mr. BARTHOLOMEW, in reply to the various observations made, said that the President's question as to the cost of batteries was practically the most important. As to the relative cost of batteries in use, he (Mr. Bartholomew) was afraid he could not throw much light upon the question, for the reason that the only kind of battery which could be said to have proved its cost was the sulphate battery—a modification of the Daniell. The other forms of battery had been so recently introduced, that no approximate value of their cost could be arrived at. Two of the batteries mentioned, *viz.* the Marie-Davy and the Leclanche, possessed merits, not because they were cheaper in their first cost, for they were actually dearer, but because of the infrequency with which they required attention. At stations where batteries were in use, and which lay in remote localities, it was a matter of greater importance to secure a battery that would do the same amount of work, and would only require to be attended to, say, once in six months, even though it cost more at first, rather than to have a battery which cost less in the first instance and required attention, say, every month. Again, it was difficult to arrive at the cost, because the consumption of the elements depended upon the amount of work the battery had to perform. A battery in constant use soon became exhausted, which was not the case when the battery was seldom employed, because, as he (Mr. Bartholomew) had stated, there was no local action going on in a well-constructed battery, except when in use. Mr. Cargill had questioned a point which he (Mr. Bartholomew) had not raised. In making use of the illustration of the steam pipe, he (Mr. Bartholomew) did not attempt to give a satisfactory solution of what electricity was. No one knew what it really was. They knew its effect, and how to produce it. They knew that if two poles of a battery were connected together by a conductor, an action throughout the battery and conductor was obtained, and the action was always in accordance with a known law; and putting these facts together, it might be assumed with some degree of probability that something travelled. Mr. Kershaw spoke of everything being charged with electricity, and he was right. It appeared to him (Mr. Bartholomew) that the methods employed for producing electricity were simply so many methods of altering the normal electrical condition of a body. The battery was one such

method. It might be said that light did not travel, but was simply a rapid vibration of something called ether. That might be right or wrong; Newton might have been wrong when he ascribed light to the passage of infinitely small particles, and experiment tended to this belief; yet we must not be too dogmatical even with respect to light. With reference to the action of the electric current when passing through and decomposing water, it had been assumed that an entire chain of aqueous atoms was being decomposed, but yet there was no apparent action in that chain of particles, but merely a transmission of effect. Upon one end of the chain the hydrogen element predominated, and upon the other side the oxygen element predominated; that condition did not, however, continue, because the hydrogen element was given off at one extremity and the oxygen at the other. An entire change was therefore continually taking place, and it was the dynamic effect alone they were cognizant of; and so the electrical condition of the conductor was static until changed under the influence of the battery.

Mr. Latham had asked whether sand was not largely used in batteries to prevent the deposited salt being transferred from one plate to another. So far as sand was a porous medium it acted as a diaphragm, but electricians could not carry out in a sand battery the necessary conditions for obtaining a constant electric action. When a diaphragm was used, as in a Daniell, a space was obtained in which could be put the salt, which was essential for the reproduction of the surface of the copper. But when the space was filled up with sand the salt could not be introduced, the absence of which allowed the sulphate of zinc to affect the surface of the copper. Portability was, however, secured by its use. Cooke, when carrying out his early experiments, frequently found it necessary to have batteries carried along a railway, and he suggested that the liquid in batteries might be replaced by moistened sand, which was not soluble in the acid solution. Sawdust was equally efficient. It merely acted as an absorbent of the liquid, and thus prevented it spilling; but it had no advantage over the liquid battery.

Mr. Field had inquired what batteries were used by the Post Office. At the present time they were mainly employing the ordinary sulphate battery. There were, however, several new forms before them, one of which was the Highton battery, and so far as it had been used, it presented valuable features. He (Mr. Bartholomew) was interested in its success. He had had some put on the busy circuits of different lines of railway, in order practically to test them, and so far as they had been tried had proved a success. He might mention that the ordi- railway circuit on the London and North-Western line,

between Euston and Manchester, which had hitherto been worked by six batteries of twelve cells each of the sulphate battery, was being worked by three batteries of the new form of ten cells each, and so far the results were good, the signals being as powerful with the thirty cells of the new form as with the seventy-two cells of the old form. On the Midland line that form of battery was working between St. Pancras and Bedford, giving excellent results. The Post Office was trying them, and if approved of, they would doubtless supersede the other forms.

Mr. J. Adams had inquired what effect atmospheric electricity had upon telegraphs. Did Mr. Adams mean lightning or the aurora? Lightning had a transient, but frequently a very detrimental effect. He (Mr. Bartholomew) had an instrument on which lightning had had a great effect, and which showed what lightning could do. The superintendent of the Midland system of telegraphs had informed him that upon a recent occasion lightning had entered a cabin by one of the wires, and had scattered all the signal indicators, breaking up the wooden cases into chips, and fusing the metal into globules. Such effects were not uncommon. Lightning would do even more than that,—it could melt a No. 8 iron wire, and in some instances had even broken such a wire into chips, separating it as if it had been cut off by pliers, and descending to the earth by the poles, which were imperfect conductors, had been known to shatter them to pieces. The greatest enemy that certain lines had to contend with was the aurora. That was a common phenomenon in high latitudes; its effects were not, however, visible on lines running north and south to the same extent as upon those running east and west. The Edinburgh and Glasgow line ran east and west, and was often affected by the aurora, but the line from Edinburgh to Newcastle running north and south, was not so affected. He had often, when the former line was strongly affected by the aurora, connected the Newcastle line to it, and it was found that the clerks at stations on the former line could read better when the lines were so united.

The normal position of the needle in a needle instrument was vertical, and the signals were given by the movement of the needle to the right or left, and it was desirable that however great the deflection of the needle might be, owing to the effects of atmospheric electricity, the needle should retain a midway position between the stops. The effects of an aurora were sometimes as powerful as several cells of the battery, and although there were mechanical means at the disposal of the clerk to put the stop-pins over so that the needle should remain midway between them, it was yet difficult to read when the needle

deviated much from the perpendicular. Static and dynamic electricity were very dissimilar. One had an enormous amount of tension, and the other a very low amount. Tension meant that characteristic of electricity which gave it power to overcome resistance; everything in nature tended to obstruct the passage of electricity, and, at the same time, everything in nature permitted of its passing. The terms conductor and non-conductor were used comparatively. Atmospheric electricity having high tension would pass over the insulator and down the pole, but the battery current would not. Because the insulator and the pole were not perfect non-conductors, the high tension of the atmospheric electricity allowed it to pass over these low conductors. It was only due to its higher tension that it could pass through the air, for the air was a very low conductor, and advantage was taken of that fact in the construction of lightning protectors.

With regard to the transfer of the electric fluid to the ground, one method of accomplishing that object was by separating the wire from the earth by a small interval of air, and another way was to take two pieces of silk-covered wire and twist them together and coil them round a bobbin, leaving one of the ends of each free, the other ends being connected respectively to opposite sides of the coil requiring protection. So long as the silk remained intact, however thin, the battery-current was unable to pass through it, but the high tension of a flash of lightning permitted it readily to pass through; the silk instruments were constantly being saved from the effects of lightning by that means, because the coil interposed a greater resistance to the passage of the lightning than the small interval of air.

The PRESIDENT, in closing the discussion, observed that Mr. Bartholomew had not only given the Society two valuable papers full of practical matter, but had now supplemented them by some useful and highly interesting information.

November 4th, 1872.

JABEZ CHURCH, PRESIDENT, IN THE CHAIR.

MILFORD HAVEN AND ITS NEW PIER WORKS.

By HENRY DAVEY.

The design of the author of this paper is, in the first place to afford some general information respecting the magnificent harbour of Milford Haven, and in the second to describe some works which have been carried out by him in connection therewith. The author would premise that in the paper he advocates the extension of engineering works for ship accommodation in the haven, his reason being that the estuary, from its geographical position, as well as for other important reasons, is admirably adapted for an extensive commerce, both as regards exports and imports. The limits of a paper, however, do not permit the author to enter at any great length into all the arguments he could adduce in support of his views. He has, however, thoroughly satisfied himself upon the point, and accepts the proposition as demonstrated. The paper embraces two definite subjects, first, the harbour itself, and secondly, the iron pier and its machinery, the second portion being illustrated by a set of drawings and working tracings.

Lord Nelson once pronounced the harbour of Milford Haven to be "one of the best harbours in the world." The principal direction of the water is east and west, but near the entrance it trends towards the south, so that the water is entirely land-locked to a spectator looking from a point far up the haven. The southerly bend serves to break the sea and subdue the swell, so much so that even in or after the roughest weather scarcely any swell is felt inside the "Stack Rock." In calm weather the haven resembles a lake, and in rough weather it is not at all uncommon to see two or three hundred vessels lying safely at anchor. From the 'Admiralty Sailing Directions for the Bristol Channel' the author extracts the following description of Milford Haven:—

"Although the term haven is locally given to almost every nook on the coast of Pembrokeshire, yet to no part of it can

that term be properly applied except to Milford; indeed, no safe harbour can be found between Land's End and Holyhead, not even in the whole Bristol Channel, where a single moderate-sized ship can be afloat protected. In Milford, however, the largest fleet will find shelter and security, with easy access and good working room as far up as Milford town. Though a mean fall of 22 feet at spring tides produces much contraction in the working way when above the Stack Rock, yet by daylight the leading marks are so clear that any vessel can run up to the dockyard without a pilot, even should the buoys be taken away; and at night a first-rate may find her way into a land-locked anchorage by a few bearings of the light. The mouth of Milford Haven opens to the S.W., and bears from Cape Clear E.S.E. 164 miles, from Lundy Island N. ½ W. 36 miles, and from the Smalls Light S.E. by E. 16½ miles. Precelly Mountain, which is plainly seen long before the objects on the coast, being brought to bear E.N.E., will lead a ship from the offing to the entrance. It should be further premised that as Milford Haven receives the necessary flood tide for filling seventeen creeks, so the returning ebb, uniting with the streams Cleddi and several smaller rivers, runs fully three knots in the springs and two in the neaps, but more or less according to the freshes."

In 'The New Piloting Directory for the Bristol Channel and St. George's Channel,' it is stated that Milford Haven is generally considered the most capacious, the most commodious, and the most secure harbour in the British Islands. It has no sort of danger in its entrance which may not be avoided without a pilot, and ships may with perfect safety sail either in or out (by taking the tide) either by night or day. Those which come in without anchor or cable may run on shore on soft ooze and lie safely.

Captain Denham also stated in evidence before the commissioners on an "Irish Packet Station," that Milford Haven was the most accessible port he knew, that there were no delays in making it under any possible circumstances.

Captain Sullivan, R.N., C.B., states that "Milford is so admirably situated for all vessels around Cape Clear, and they save so many risks of going there, that he would not put Holyhead in comparison with Milford as a port if he had to select the two; that although, as a commercial port, Holyhead has one advantage in being nearer the manufacturing districts, yet Milford is nearer to London and the western manufacturing districts, and that steamers landing their mails and the light goods at Milford would give them a great advantage over Liverpool, as passengers landing at Milford would be in London before they would be in Liverpool going up channel."

The following is the extent of Milford Haven. The distances from its entrance are:—To Milford Town, $5\frac{3}{4}$ statute miles; to Newton Noyes, $6\frac{3}{4}$; New Milford and Pembroke Dock, 10; to Lawrenny, 13; to Langam Pool, 15; Landshipping, $16\frac{1}{2}$; to Little Milford, 19; to Haverfordwest, 22 statute miles. The area of the main portion of the estuary from Blockhouse Points to the mouth of Cosheston Pill, above Pembroke Ferry, is:—At high water, 8810 acres; at low water, 6855 acres; at one fathom deep at low water spring tides, 5354 acres; at three fathoms deep at low water spring tides, 4245 acres; at five fathoms deep at low water spring tides, 2931 acres. The rise and fall of the tide is 26 feet at high spring tides, which gives the port a great advantage for the establishment of graving docks.

The late Mr. Brunel surveyed the whole extent of Milford Haven, and the plans and descriptions of docks and piers proposed to be made by him at New Milford, the terminus of the Great Western Railway, have been approved by and are now with his successor, Mr. Brereton. The estimate, 220,000*l.*, includes a floating basin twenty acres in extent, twelve of which will have a depth of 24 feet at neap tides, and upwards of 3000 feet of wharf frontage, with appliances for shipping from 6000 to 7000 tons of coal per day, and capable of being enlarged as may be required; a graving dock 500 feet in length and 90 feet in width, with a depth of water on the sill of 28 feet at neap tides, and a jetty and floating pier outside the basin, at which vessels drawing 24 feet can lie afloat at all times of tide. The question of making a graving dock large enough to take the 'Great Eastern' on the site just alluded to has lately been under the consideration of the Great Western Railway Company, and it is expected that the scheme will be carried out. It will be remembered that some years since the 'Great Eastern' (upwards of 650 feet in length) was placed on a gridiron, on the beach opposite the dockyard, and near the Great Western terminus, for the purpose of having her bottom thoroughly examined and cleaned. She steamed up the harbour at low water to a spot ten miles from the harbour's mouth, and for several weeks swung at her own anchors without moorings, a fact which speaks volumes in favour of the port for the accommodation of large ocean steamers. That portion of the deep water channel which extends from the near point to the railway terminus and New Milford is very tortuous as compared with other portions of the haven, and it appears very strange to the author that the Great Western Company should have selected New Milford or Nayland for the establishment of the Irish steam-packet station in preference to the more advantageous sites which might have

been found between the Wear and Hakin Points. It may be argued that experience has proved the site to be well selected, in the regular and safe manner in which the traffic has been conducted since its establishment; but there is no disputing the fact that three miles steaming might have been saved if Newton Noyes had been made the terminus, and the accommodation might have been extended to meet the requirements of large ocean steamers as well, without risk of Admiralty interference. In consequence of the position of the dockyard and naval arsenal with reference to the Dockyard bank and the deep water channel, the Admiralty authorities naturally look with jealousy and suspicion on all works for extensive ship accommodation attempted, or proposed to be carried out, in that vicinity. Any alteration in the tidal currents would probably cause an alteration in the channel, and might silt up the water-way in front of the dockyard so much as to cause very serious results. The Pembroke and Tenby Railway Company have been prevented by the Admiralty from carrying a pier (which they have lately partly constructed) into the deep water channel, hence it is perfectly clear that neither Nayland (or New Milford) nor Pembroke is the most suited for an increasing or an extensive commercial shipping traffic.

There are several inlets, or pills, branching out from the main channel of the estuary. Many of these pills are available for docks, which could be constructed at a small cost, nature having in many cases half completed the work. Two Acts of Parliament are in existence, one authorizing the construction of a dock in Castle Pill, having an area of 30 acres, and another for a similar work in Hubberston Pill, having an area of 60 acres. The latter scheme embraces an entrance lock of 400 feet long by 60 feet wide, with 28 feet of water on the sill, with two pairs of circular gates, and capable of being used as a tidal basin for small craft. In connection with this lock there is authorized a graving dock 600 feet in length.

A more gigantic scheme has been approved by the Lords of the Admiralty, which provides for the enclosure of the whole of the water within a line stretching from Hakin Point to Newton Noyes, and having an area of 200 acres. Several other parts of the haven have been surveyed, and several other schemes for providing dock accommodation have been proposed of greater or less importance; but it would occupy too much time to describe them here.

The most important works which have been executed for the utilization of the natural advantages possessed by Milford Haven are: (1) The Government Dockyard at Pembroke Dock; (2) the

Great Western Railway Company's terminus at New Milford; and (3), the railway and iron pier of the Milford Haven Dock and Railway Company at Newton Noyes. The dockyard is more safely situated as regards the attack of an enemy than any other in England. It will be remembered that only a few months ago H.M.S. 'Thunderer' was launched from this yard. The dimensions of the ship are 285 feet in length, 62 feet in width, and 4412 tons burden, old measurement. At the Great Western terminus there is a pontoon for the accommodation of the Waterford and Cork steamers, and to which the author has already alluded. At Newton Noyes an iron pier—illustrated herewith—has been constructed running out from the mainland into deep water. It is provided with three lines of rails, and is connected with the Great Western Railway at Milford station by means of a short line running along the north side of the haven near the foreshore. The main portion of the pier is 600 feet long and about 50 feet wide, supported on four rows of wrought-iron piles in 20 feet bays, except for a portion near the middle and at the outer end, in which the piles are spaced 12 feet apart. At the outer end an L piece is built at right angles to the main portion, measuring 180 feet in length, of the same construction as the other part of the pier. The pier is provided with hydraulic machinery, which will be described presently.

The author cannot within the compass of one paper enter into all the details of the circumstances which led to the execution of the completed works, or into all that might be said for or against the various works which have been proposed; but before entering upon a description of the pier and machinery he will venture on a few observations which, if not of much value in themselves, will perhaps elicit some valuable knowledge from the discussion. The author assumed at the commencement that the position of Milford was suited for an extensive shipping commerce, and perhaps the most important which may be looked for is a coal traffic and making the haven a station for large ocean steamers. The question arises, How are the requirements to be best provided? Should the traffic be carried on in the stream, or in the dock? Although it is certain that a mixed and extensive shipping could not be carried on without dock facilities, nor would it be well to make any port the station for ocean steamers where there is not graving and other dock accommodation, yet for all purposes of passenger traffic, for the shipping of coal, and for a great deal of general cargo, pier accommodation in the stream would prove the most suitable and remunerative. But there are several points in the construction of piers for such purposes which require careful consideration.

In the first place, the ships when lying at the pier should lie in a line with the tidal current, and under no circumstances should they be put athwart the tide, except in the case of small craft and lighters. The author would here explain that he is speaking of skeleton piers, for it is certain that the Admiralty would not allow solid piers to be built in situations at all likely to divert the tidal currents, and cause an alteration in the deep water channels. Besides, solid piers built across the stream would be very liable to accumulate mud and sand at their sides, which would render them unfit for the only additional purpose that a solid pier would have over a skeleton structure. It must be remembered also that piers in deep water could only be built in a line with the deep channel, and on one of its edges, without interfering with the navigation of the haven and incurring Admiralty displeasure. Again, it would be difficult to moor a small vessel, and impossible to moor a large one, safely to a skeleton pier athwart the stream at all times of tide, seeing that the tide flows over three knots per hour.

It follows, then, that all large vessels must be berthed in a line with the stream, and this fact leads the author to a consideration of the best and most economical construction, together with the best situation for piers, for increased ship accommodation in the haven. It is self-evident that wrought-iron piles and bracing would offer the least resistance to the current, and form a structure least liable to damage from the riding of a ship. The piles should be screwed to the solid rock, which is reached at a depth of from 20 feet to 25 feet from the surface of the mud. The pier head should be T-form in plan, and, if for the accommodation of ocean steamers, it should have a pontoon made to rise and fall with the tide on fenders, against which the ships would lie. Moorings, similar to those in use at the present pier, should be provided. Fore and aft of the pier pontoon, and in a direct line, might be placed additional pontoons, moored with similar cables, and having separate ship moorings. In this way the present pier might be made to accommodate three ocean steamers. The distance of the deep water from the shore lessens, on leaving the present pier, towards the east. Jetties might, therefore, be built, provided with coal drops in connection with the present railway, at a small cost, and accommodation might be afforded for shipping 5000 to 6000 tons of coal per day at one-tenth part of the cost of constructing docks for the same purpose. Vessels might go to the drops at any time of tide, with no delay for docking, and at charges much lower than those of other ports. At Swansea a "stranger" must have a pilot on board to enter the port,

which is inaccessible till four hours flood on the springs, or till near high water at neaps. But at coal drops in the haven vessels might receive their cargoes without any delay for tide or for docking. The author has designed a plan for the coal drops, a description of which, however, would prove too lengthy for the present paper. He therefore leaves this part of the subject, and passes on to a description of the iron pier and hydraulic machinery.

The construction of the pier itself will be seen from the engraving, where it is shown at Fig. 1 in elevation and at Fig. 2 in plan. It is built throughout of wrought iron, except the caps and screws of the piles, which are of cast iron. The outer piles are 6 inches diameter, and the inner ones 5 inches diameter. Longitudinal plate girders, resting on the caps of the piles, carry cross girders spaced 5 feet between centres, which carry the superstructure, on which is laid three lines of rails. The pier runs in a straight line for 600 feet from the masonry, and a further portion of 180 feet in length is constructed at right angles, so that the plan of the pier has the form of an L. At the termination of the middle line on the main part of the pier has been erected a hydraulic coaling hoist and a 3½-ton hydraulic crane, and on the sides of the pier provision has been made for the erection of six 1½-ton cranes, although three only have been erected up to the present time.

About 150 yards inland from the shore end of the pier is situated the engine and boiler houses, and accumulator tower, shown in longitudinal section at Fig. 3, and in plan at Fig. 4. From the accumulator is laid a line of 3-inch pressure pipes, extending to the end of the pier, from which line branches are taken off *en route* and connected to the various cranes, capstans, momentum valves, &c., and through which the motive power is transmitted from the pumping engines.

At the rear of the engine house a well was sunk for the purpose of obtaining fresh water for use in the machinery; it was readily formed by sinking a pit and lowering a cast-iron cylinder into it. From this well, water is pumped by means of one of the author's direct-acting pumping engines, to a wrought-iron tank fixed in the upper part of the engine room, and a float is placed in the tank, which, being made to act on the throttle valve of the engine, automatically keeps the tank constantly supplied. From the tank, suction pipes lead to the pumps of the main engines, from which the water is forced through the accumulator and the line of pipes to the pier machinery.

There are a pair of horizontal high-pressure engines coupled, a longitudinal sectional elevation of which is shown at Fig. 5,

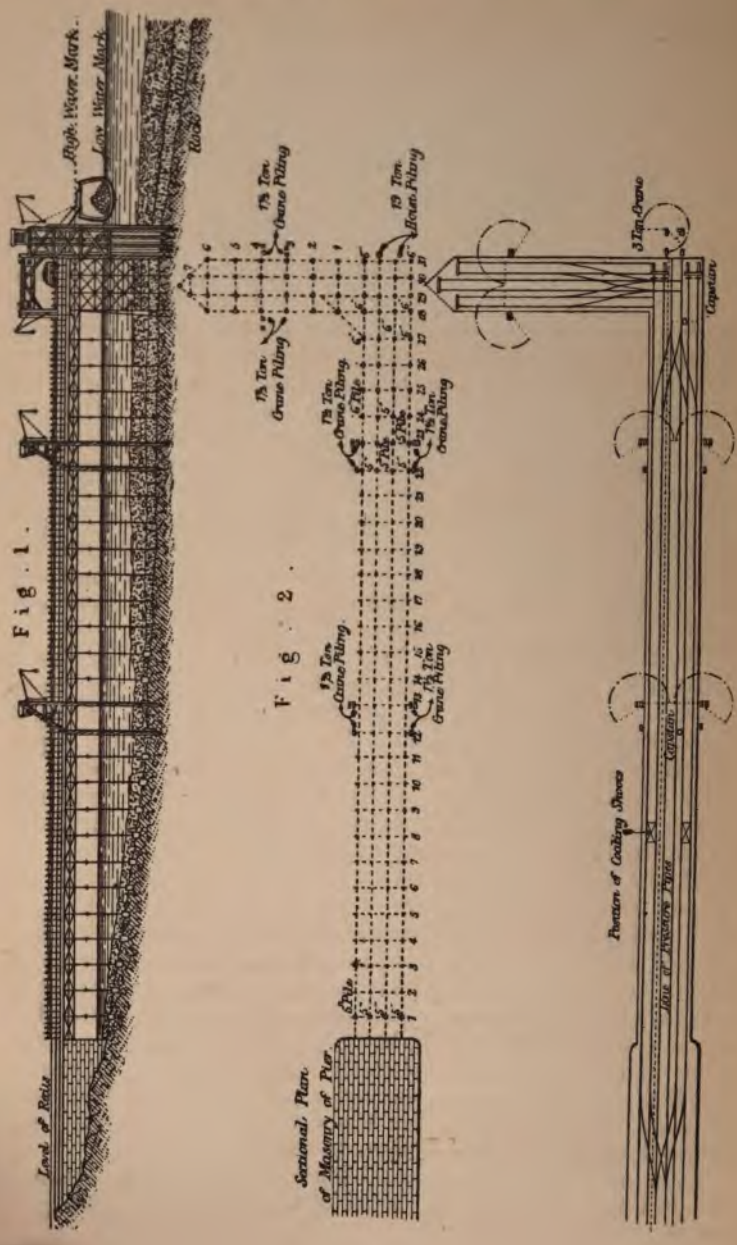
Fig. 1.
High Water Mark.
Low Water Mark.
Road.
Level of Rails.
Fig. 2.
15 Ton Crane Piling
15 Ton Beam Piling
Piles.
Sectional Plan of Masonry of Pier.
3 Ton Crane
Capstan.
Position of Cooking Sheds
Line of Excavation Pipe

and a part sectional plan at Fig. 6. The cylinders are each 12 inches diameter by 2 feet 6 inches stroke. The pumps are

Fig. 3.

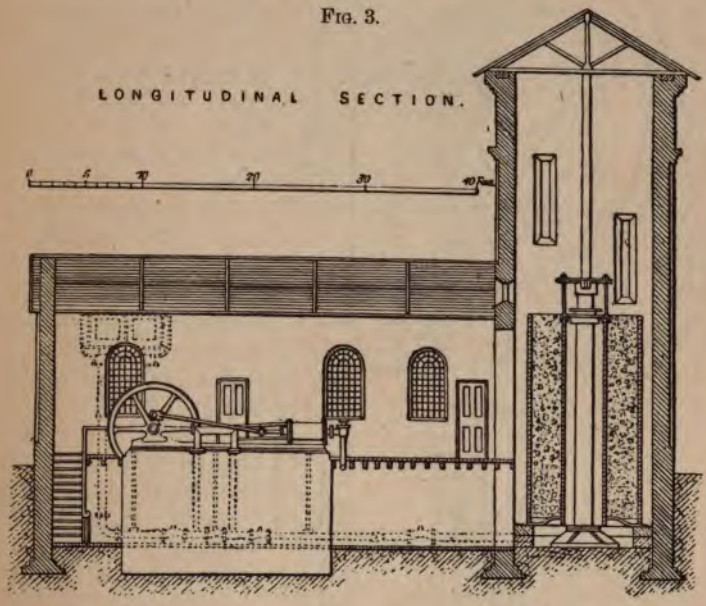

Fig. 4.

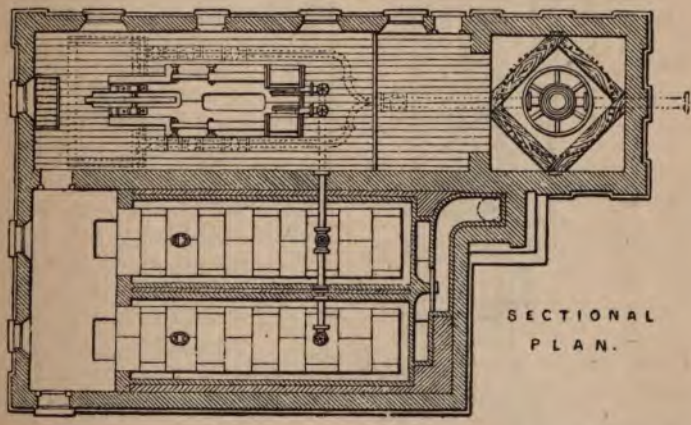

of the piston and plunger variety, with pistons each $3\frac{1}{2}$ inches diameter. The barrels are lined and the plungers covered with brass. Gun-metal air cocks are provided at each end of the

pumps directly over the pipe connections. The pipes are 3 inches diameter, of cast iron $\frac{3}{4}$ inch thick, and are laid on a pipe floor extending around the engine bed. The valves and seats are of gun-metal, and the valves are provided with rubber springs to take off the shock which would arise from sudden closing under the high pressure employed—from 700 lbs. to 850 lbs. per square inch. The suction valves are further provided with gun-metal screws, by means of which they may be closed to retain the water in the tank. The boilers are two in number, each 30 feet long and 6 feet diameter, with single flue tubes. Each boiler is set with a split draught side and under flues. The tank pumping engine works a boiler feed-pump, and an independent feed is supplied from the accumulator. The accumulator consists of a ram 15 inches diameter, having a stroke of 17 feet working in a vertical cylinder and loaded to a pressure of about 800 lbs. to the square inch, with a weight of about 60 tons. As a foundation for the accumulator cylinder a bed of concrete about 2 feet thick was laid all over the ground area of the tower. The base of the cylinder is 6 feet in diameter, under which thin packings were placed to plumb the ram by,

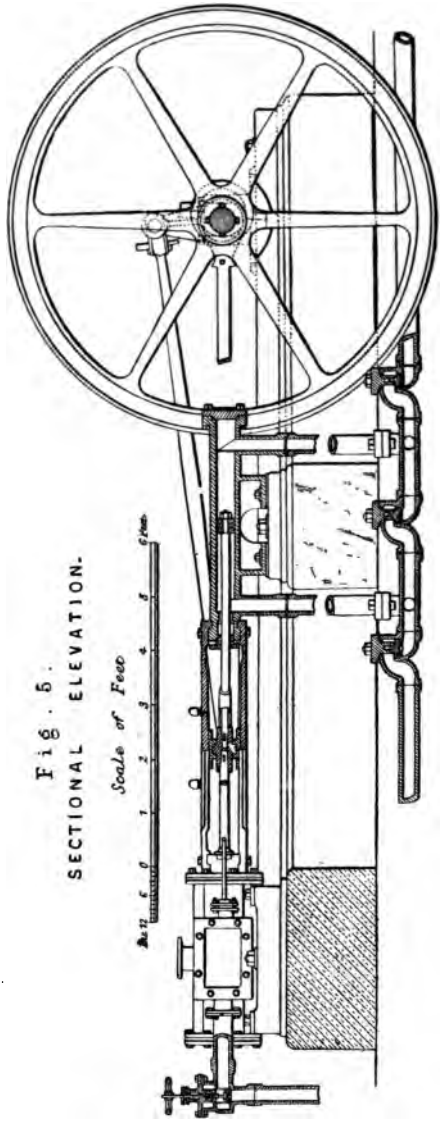

Fig. 5. SECTIONAL ELEVATION.

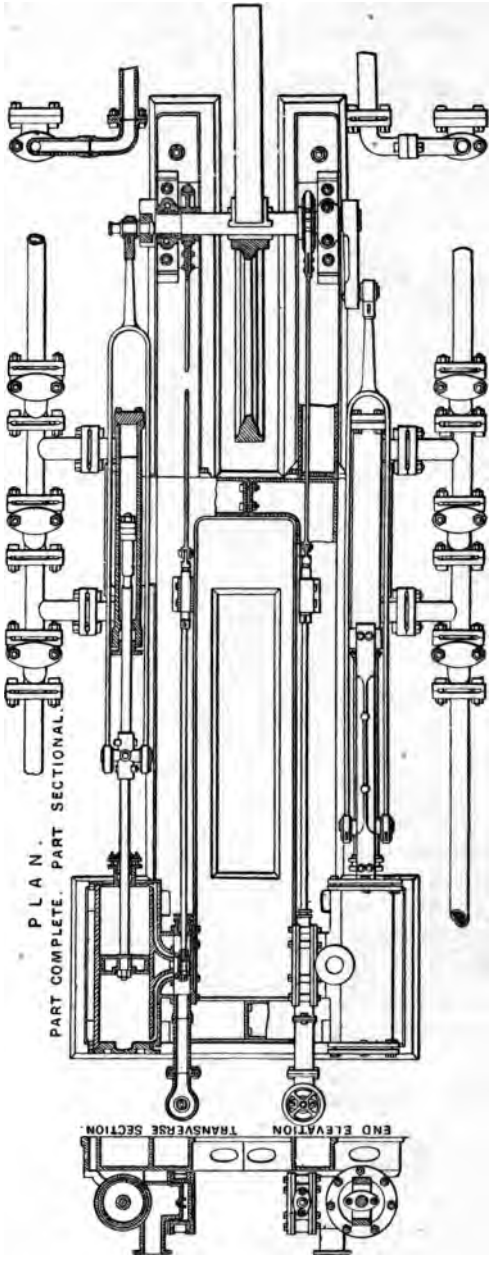
PLAN.
PART COMPLETE. PART SECTIONAL.
TRANSVERSE SECTION.
END ELEVATION.

FIG. 6.

after which liquid cement was well worked in under the base to secure a firm bearing. The weight consists of ballast, contained in an annular wrought-iron casing suspended from the cross head of the ram, and encircling the cylinder. Under the weight case are placed timber bearers 2 feet thick as a bed for it when the pressure is off from the cylinder. Between the

Fig. 7.

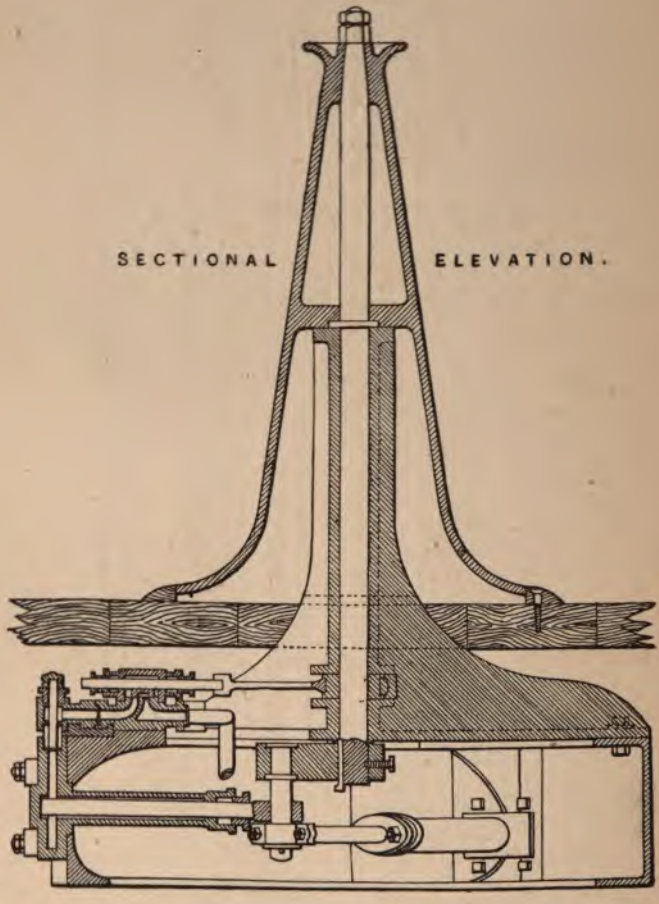

engines and the accumulator is fixed, on the pipes, a combined momentum and relief valve 2 inches diameter, which consists of a mitre valve loaded against the pressure by means of a lever and weight. That the valve may readily relieve any undue pressure arising from the momentum of the accumulator in

falling, or from its inertia in rising, a spring is placed under the weights to, in a measure, take off their inertia. The accumulator on reaching the top of its lift is made to close the throttle valve of the engines, and, as a further means of safety, is made to open the momentum valve, just described, on exceeding its normal stroke.

FIG. 8.

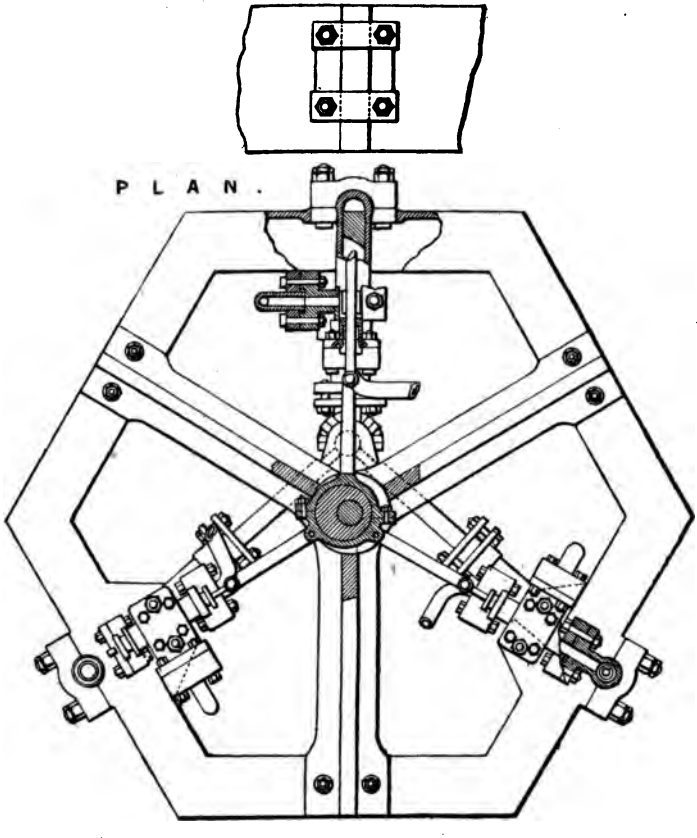

On the line of pipes after passing the accumulator are fixed three 1¼-inch momentum valves fitted with 2½-inch hose unions, that the valves may be used as fire cocks. One of the hydraulic capstans is illustrated in sectional elevation at Fig. 7, and in plan at Fig. 8; the details of the valve being shown at Figs. 9, 10, and 11. These capstans are rather peculiar in design, and have been made for running trucks on to and off from the hoist, &c. They are made to run at a high speed, and are

provided with small heads for the use of ropes. There are three gun-metal rams coupled direct to one crank fixed on the

Fig. 9.

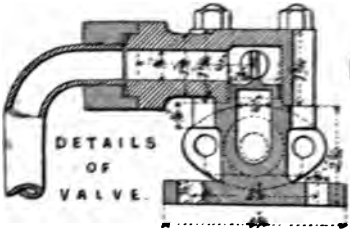

Fig. 10.

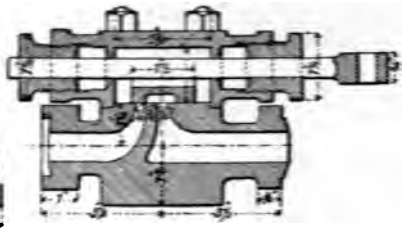

Fig. 11.

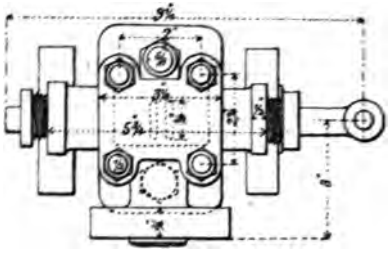

spindle of the capstan head. The slide valves are all worked from the same eccentric, which is shown on the engravings.

The $1\frac{1}{2}$-ton hydraulic crane is shown in side elevation at Fig. 12. The remaining figures show the details of the crane and hydraulic hoisting apparatus, each figure having its own brief explanatory description and reference marked on it. The construction of the hoist is very ingenious. It is provided with a double cylinder, having two main rams each 8 inches diameter and 30 feet stroke, under the platform, and a tipping ram 7 inches diameter attached to the tipping frame. The hoist cylinder is a splendid casting, measuring 34 feet long, cast in one piece, and weighing over 6 tons. It was cast in a vertical position. The main rams are hollow, and from the top of one a pipe is fixed to the valves, and from thence to the tipping cylinder. A wrought-iron spout is made to lift on rail guides on the front piles of the hoist, to suit the varying conditions of the tide, and is capable of being fixed in any position.

The *modus operandi* is as follows:—The small internal ram takes up the slack chain, the large ram lifts the goods clear of the truck, and the next movement of the crane handles swings the crane and opens the large cylinder to the return pipe, leaving the small ram still in communication with the pressure pipe. The water which was used in bringing in the chain from the previous delivery is then caused by the descending weight to return to the pressure pipes, and the power expended is again stored up in the accumulator. It will be seen that the hoist is

provided with two rams working side by side. The hoist is made to lift trucks 15 feet above the pier rails and lower to 15 feet below them. One ram is sufficient to lift the empty platform, but not

FIG. 12.

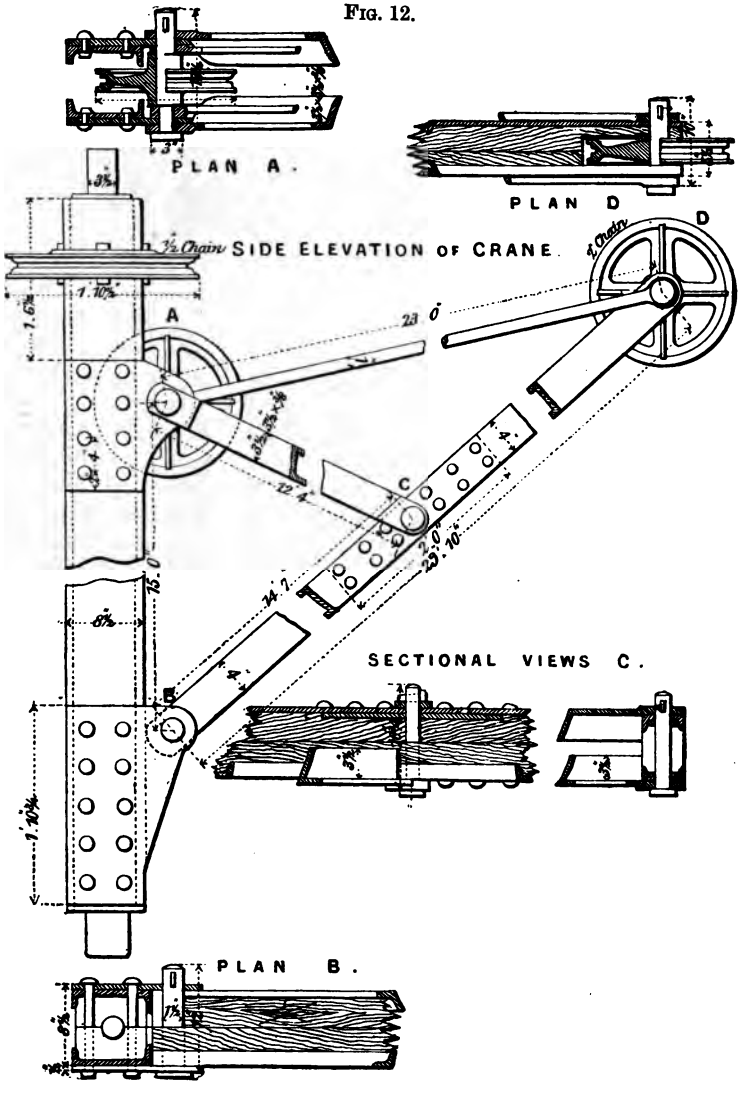

an empty truck on it; so that when the hoist is working above the rail level, one-half of the water required to lift the weight is returned to the pressure pipes, and in working below the rail the

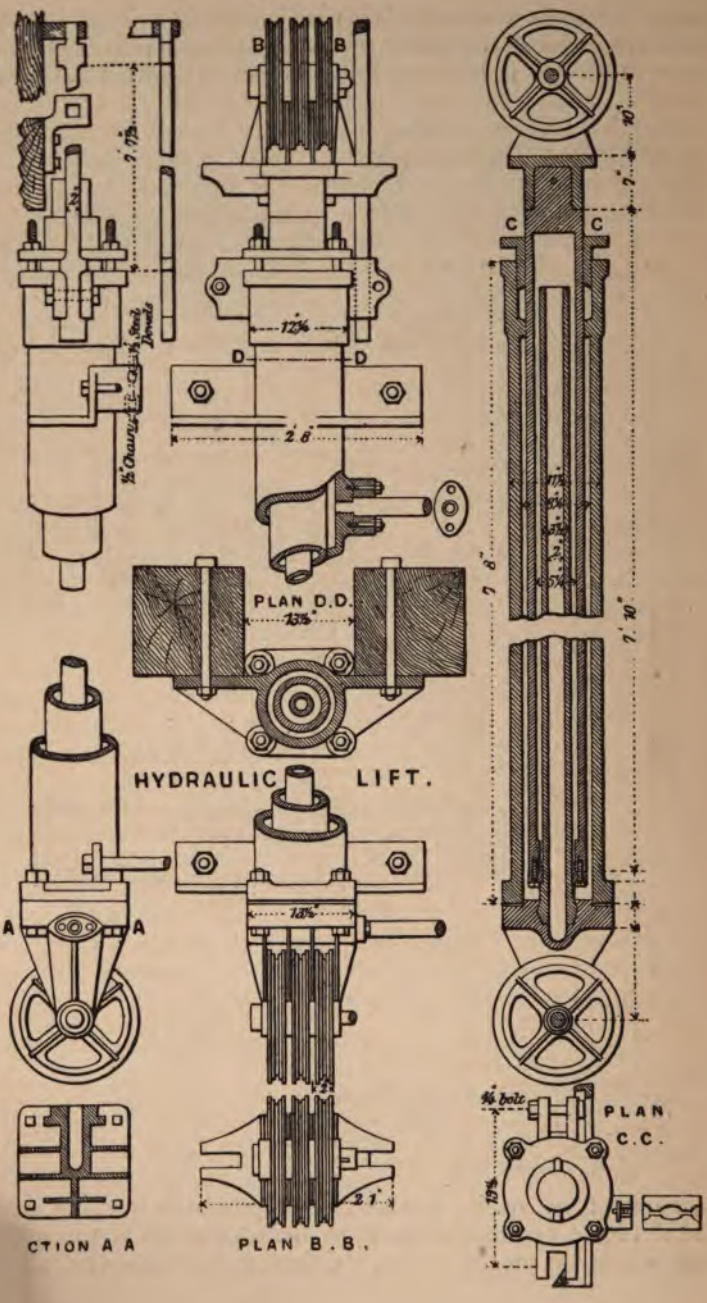
B
B
C
C
D
D
A
A
PLAN D.D.
HYDRAULIC LIFT.
CTION A A
PLAN B.B.
PLAN C.C.

same result is obtained. Therefore, both in lifting full trucks and returning empty ones, or *vice versâ*, the displacement of one ram only represents the quantity of water used. Thus let the weight of the hoist platform, &c., equal 10 tons, weight of truck equal 5 tons, weight of coal equal 10 tons per truck, lifting power of the two rams equal 27 tons; then, in working from the rail upwards, the load, inclusive of the platform, &c., equals 25 tons; power of the two rams equals 27 tons; 2 tons available surplus power in lifting. When the 10 tons of coal have been tipped, the load in descending is equal to 15·0 tons, resistance

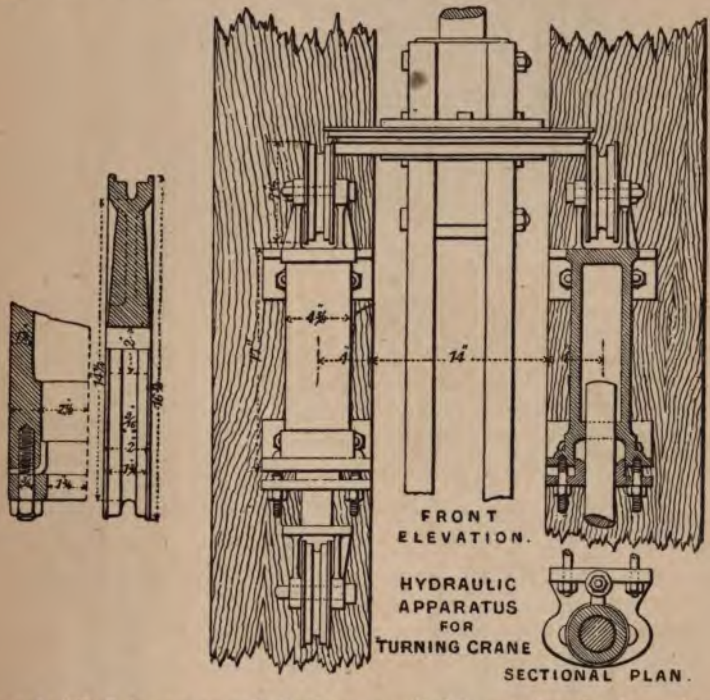

equals 13·5 tons; equals 1·5 ton available surplus for lowering. In lowering one ram is open to exhaust, the other remaining open to the accumulator.

It will be seen that the displacement of one ram only is the measure of the water and power expended in the operation. The same reasoning holds good in working below the rails, thus: Load as before, equals 25 tons; power—one ram opened to the accumulator—equals 13·5; available power for lowering equals 11·5 tons. The displacement of one ram is always returned to the accumulator in the lowering motion of the hoist.

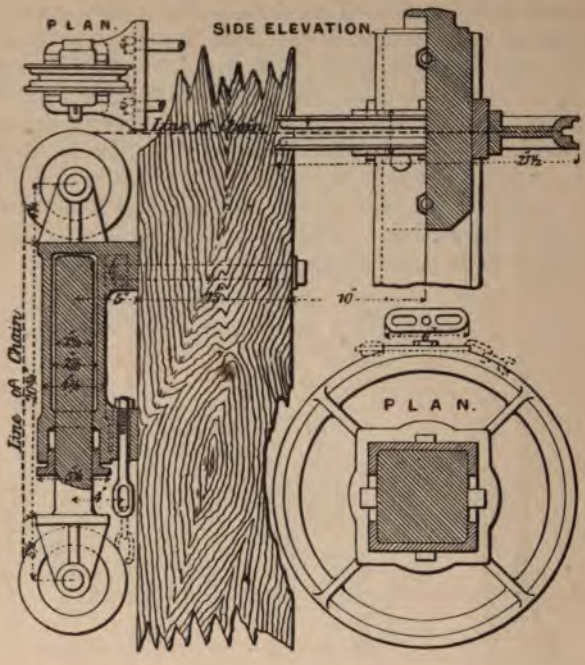
PLAN.
SIDE ELEVATION.
Line of Chain.
Line of Chain.
10"
PLAN.

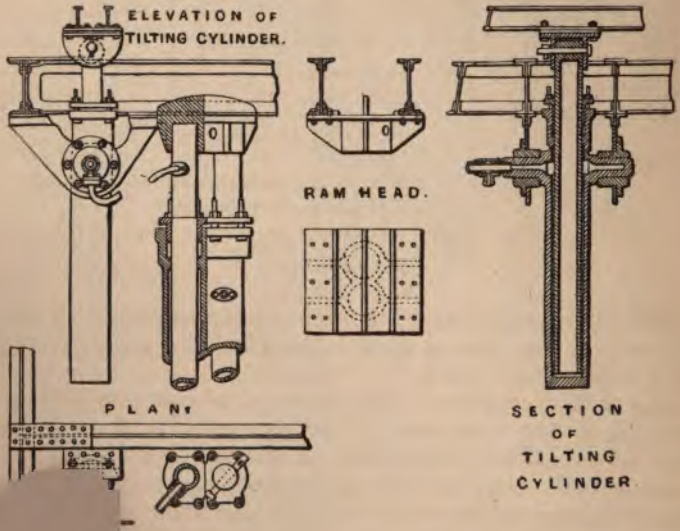
ELEVATION OF TILTING CYLINDER.
RAM HEAD.
PLAN.
SECTION OF TILTING CYLINDER

The principle involved formed the subject of a patent taken out by the author in 1869, but which has since expired. The

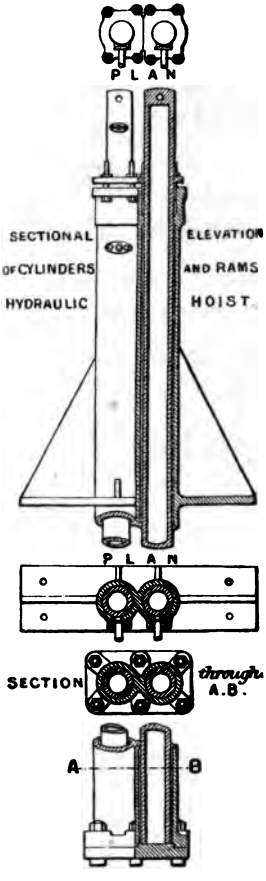

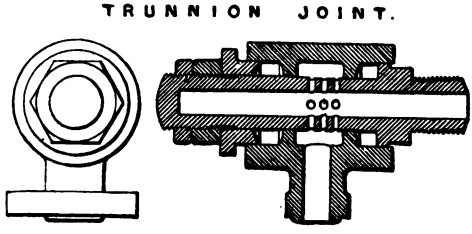

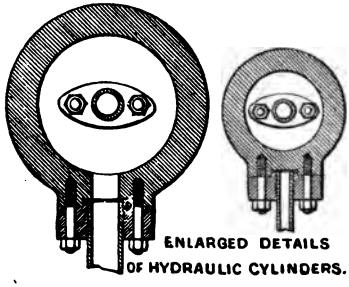

total result of this method of working as compared with the ordinary arrangement is as follows:—In the ordinary method the power and water expended is measured by the gross load: Platform 10 tons, truck 5 tons, coal 10 tons; plus for friction, &c., 2 tons; total, 27 tons. In the author's plan the power and water expended is measured by net load plus that for friction, &c., equal to 13·5 tons, the gain therefore being equal to one-half, or cent. per cent. on the net.

The positions of the machinery are clearly shown in the engravings at Figs. 1 and 2. The $1\frac{1}{2}$-ton cranes are fixed on piling at the sides of the pier. The piles are carried up to a height of about 50 feet above the pier platform, and are braced by means of a longitudinal and two diagonals to a similar set of piles on the opposite side of the pier. The crane cylinders are fixed vertically on the piles at the back of the crane posts, and cranemen's houses are built on the piles above the cylinders, from which a view of all the craning operations is commanded. In the houses are placed the valves and levers, also retaining

cisterns for the purpose of keeping the cylinders always charged with water. When goods are being lowered, or the chain and slings alone lifted with the cranes, the internal ram is open to the pressure pipes and the cylinder to the retaining cistern, which is provided with an overflow pipe. The lift of the cranes is 40 feet, and the stroke of the ram 1 to 6. The radius of the jibs is 23 feet, and the size of the chain $\frac{1}{2}$ inch. The 3-ton crane is of the same construction as the $1\frac{1}{2}$-ton cranes, and the size of the chain is $\frac{3}{4}$ inch.

In conclusion, the author would observe that he carried out the mechanical portion of the works described in this paper, and buildings connected therewith, under Mr. Bower, the contractor for the works and lessee of the pier. The machinery has all been in operation for some time past, and has worked most successfully, from 12,000 to 15,000 tons of cargo having been discharged under a single crane since the machinery was erected.

DISCUSSION.

The PRESIDENT inquired if Mr. Davey could state what had been the cost of the works.

Mr. DAVEY said the contract price for the hydraulic machinery was 16,000*l.*, and that amount included the cost of some alterations in the railway. He was not prepared to say what the exact cost of the pier had been, but he believed it was over 50,000*l.* The total cost of the works, including the pier and railway, he believed amounted to something like 180,000*l.* The railway, a mile and a quarter in length, was cut for the most part through solid rock. That amount also included a bridge over the entrance to Castle Pill, but that was only a temporary work in anticipation of some dock improvements there, for which an Act of Parliament had been obtained.

Mr. J. H. ADAMS asked who was the contractor for the pier and of the machinery for lifting and lowering the trucks. He thought the capstans were of an unusual form, tapering very much, and being smaller in diameter than those ordinarily used. He doubted whether the capstans would hold the ropes properly.

Mr. V. PENDRED asked how the pier was constructed. He thought the method of carrying out the work would prove interesting, as the pier presented several peculiarities in constructive detail. There was first a depth of 25 feet of mud to get through before the rock was reached. Then there was the question of screwing in the piles. Another point upon which information would prove useful, was the manner in which the accumulators were worked.

Mr. F. W. BRYANT asked what was the diameter of the screw piles and the pitch of the screw. From the drawings it appeared that there was a block shown for the piles to rest on. He should be glad to have the arrangement explained, and to know how the screw piles were screwed into the rock. He would further be glad of some detail information as to the bracing, and with regard to driving the timber piles. Were there any wood-worms in those waters, and if so in what way was the timber protected?

Mr. J. H. ADAMS asked what was the height of the pier and the character of the temporary works used in carrying out the construction.

Mr. W. H. LE FEUVRE asked what was the quantity of coal that had been discharged, and the actual cost per ton.

Mr. BALDWIN LATHAM considered that the discussion should not be so much upon the pier as on the hydraulic machinery to which the author's illustrations referred, and to which the paper was devoted. Mr. Davey had described an excellent device for using a descending load to give back a portion of the water and power originally used in raising it. He considered the application was a very ingenious contrivance, and one that reflected great credit on the author of the paper. It was not a question of raising 1 lb. and returning that 1 lb., but of making use of a portion of the weight of the descending load to return to the accumulator a portion of the water, and therefore power originally employed in raising the weight; and he (Mr. Latham) thought that Mr. Davey had achieved a great success, for the principle enunciated in the paper had received considerable attention from persons whose business it was to devote their time and energy to the introduction of machinery of this particular kind, and therefore it was to the credit of the author that such eminent persons were following in his steps and adopting his views.

Mr. DAVEY, in replying to the various questions that had been put to him, observed that Mr. Bower, of St. Neots, was the contractor for the pier and works, and was now sole lessee of the pier, but at that time was one of four lessees. He was also the contractor for the hydraulic machinery. When the works were proposed the pier was in existence, but there was no accommodation for coaling, which had been since provided. With regard to Mr. Adams' objection to the taper of the capstan, it should be explained that the capstan was constructed for the special purpose of putting single trucks on to the hoist and taking them off. He was aware that it differed from those of ordinary construction, or those of Sir William Armstrong's. The main object of the great taper was to make a single cap-

stan, of high speed without gearing. It was a light capstan, and was found to answer well in practice, and the rope did not slip to any objectionable extent. On a perfectly level road the single truck once put in motion required but little force to keep it moving, and the grip of the rope being taken by a smaller capstan it required less motion to move it, and thus increased speed was obtained.

With regard to the construction of the pier, that work was beyond his (Mr. Davey's) province. It was built before he had anything to do with it, but he would endeavour to give all the information he had obtained whilst putting the hydraulic machinery up. The piles were of wrought iron, the outer piles being 6 inches in diameter, and the inner 5 inches, and they were provided with cast-iron screws 2 feet 3 inches in diameter, the thread taking $1\frac{1}{2}$ turn, and terminating in a point. The bottom of the pile was flattened down on both sides and a pin put in. At the end of the pier there was 15 feet of mud and 5 or 6 feet of shingle, and then the rock was met with. The piles were screwed by means of hand-crabs turned in the ordinary way. The accumulator was of the ordinary description, the same as used in the London Docks. When testing the machinery, the accumulator was tied down, and it was then worked at 1000 lbs., one pipe only bursting, which was easily replaced. There were two ordinary Cornish boilers, and the engines at their ordinary speed developed from 30 to 35 horse-power, although they could do more. The bracing of the pier was ordinary diagonal bracing, and he thought the outer angle irons were about 5 inches by $\frac{5}{8}$ inch. The worms were troublesome to the timber piling, but as a protection against them the piles were coated very heavily with creosote. He was afraid, however, that it was not a permanent remedy, but for a considerable time it would afford protection.

With regard to the temporary works, he (Mr. Davey) not having been present at the building of the pier, or during the construction of any of the works, could not give any information upon that point. It was certain that very substantial temporary works were required, as in carrying out the hydraulic arrangements during a heavy gale it was impossible to stand on the pier without holding on; and one morning on arriving at the pier he was surprised to find that one of the cranemen's houses, which had been built ready for hoisting up, had disappeared. With regard to the working expenses, no account had been kept of them, as the traffic had not been sufficient to show the advantages. The crane most used was a 3-ton crane, and it landed about 200 tons of coal per day for a fortnight or three weeks at a time, and during the working of that crane

the advantages of the system in storing up the power were seen. When used as a delivery crane, the expenditure of the water was simply that due to leakage, and in the land crane the expenditure was the same as in ordinary cranes. The advantages were self-evident from the engine, which made about one stroke in five minutes, when used as a delivery engine.

With regard to the questions which had been asked as to the general superstructure of the pier, there were four rows of piles in section, and on each row was laid a longitudinal girder about 2 feet in depth, with cross girders 1 foot in depth, and carrying a decking of planking. At the end of the pier the planking was 6 inches thick, and over the main body 3 inches thick. The reason for carrying the piles beyond the pier was, that it was the only way in which the machinery could be erected, the pier having been previously completed and the rails laid. As a matter of economy the machinery was placed on timber piles instead of on iron ones. The height of the pier above high water was 12 feet. The rails on the pier were laid at a dead level.

The PRESIDENT, in closing the discussion, observed that Mr. Davey's paper had afforded a considerable amount of practical information respecting recent practice in hydraulic machinery and its application to a special purpose. Mr. Davey had also supplemented his paper by information upon points of civil engineering involved in the construction of the pier, a matter upon which he had not been personally engaged, and therefore could not be expected to deal with so fully in his paper as the mechanical details which had been under his supervision.

December 2nd, 1872.

JABEZ CHURCH, PRESIDENT, IN THE CHAIR.

CONTINUOUS RAILWAY BRAKES.

By WILLIAM H. FOX.

The object of the following paper is to bring before the Society such information as will promote discussion on a subject which has only lately received a share of the attention which its importance deserves. To do this the author does not deem it necessary to trace the history of continuous brakes, as he is of opinion that the object in view will be best attained without unduly increasing the length usually allotted to papers of this kind, by dealing with our present requirements only. He therefore proposes to consider the conditions that continuous brakes should fulfil; the amount of retarding force necessary to apply to a train to stop it in a given distance when moving at a velocity of sixty miles per hour; introduce the question of wood *versus* cast-iron blocks, and finally to describe and point out the advantages and disadvantages of the chain, hydraulic, atmospheric, and electric brakes.

At a meeting of this kind it is perhaps hardly necessary to show the great advantage that would accrue to the public and railway companies in the saving of life, time, and property, by the adoption of brake power that would give those in charge of a train —whether running as "local" or long distances—such command over it as to ensure its stoppage, whatever its speed, when required, in a few seconds. In the author's opinion the question is one which should now receive the serious attention of Parliament. Railway companies should no longer have a choice in the matter, but be compelled to have fitted to every locomotive and carriage—whether passenger or goods—such brake power as would, on an emergency, be capable of reducing them (in ordinary weather after the brakes are applied) from a speed of sixty miles per hour on the level to a state of rest in a distance not exceeding 220 yards (one-eighth of a mile). No one here perhaps will dispute that such a result and requirement may be obtained, but the author will nevertheless lay before the members the calculations and tables he has made.

Our first consideration, however, should be, What are the conditions that a brake should fulfil? and we are surprised to find them so numerous, and of such a kind as in most instances to add considerable difficulty to the subject; and it is no doubt owing to these requirements to some extent that railway companies have been hitherto so slow in adopting a continuous brake system. In the author's opinion the conditions are as follow, *viz.*:—

1. That the engine driver having charge of the motive power of the train, it is necessary that he should also have charge of the retarding power.

2. That it is necessary for the engine, tender, and every carriage in a train, whatever its length, to be fitted with a brake capable of being efficiently applied by the driver.

3. That it is necessary that the brake apparatus be capable of being applied from the trail end of the train as well as from the engine, and that the brake act automatically in case of the train breaking away.

4. That the amount of brake power applied to the locomotive and carriages comprising a train should be as nearly as possible in proportion to the weight of each, so that in the event of a train breaking in two the relative power required for each part shall remain the same.

5. That the application of the brakes shall require but little exertion from either guard or driver.

6. That if the brakes on one or more carriages become inoperative, such failure shall not interfere with the working of the brakes on the remaining part of the train.

7. That the retarding force be applied throughout the whole train instantaneously, and be capable of being increased or diminished at the will of the driver or guard.

8. That it is necessary that the brake allow of any portion of the train being slipped.

9. That the coupling of carriages indiscriminately shall in no way affect the working of the brake.

10. That the brake shall be devoid of complicated parts, or any attachments that would easily get out of order or require extreme care on the part of railway servants.

11. That the application of the brake blocks shall not be attended with pressure on one side of the wheel and axle only, and so tend to uneven wear.

12. That the pressure on all the wheels of a carriage shall be the same, and as an additional precaution against vibration, the brake blocks shall cushion on air, metallic springs, rubber, or some other material of an elastic nature.

13. That the brake apparatus be in no way liable to get out of order by sudden atmospheric changes.

Should the foregoing conditions be fulfilled in a suitable manner they would, in the opinion of the author, meet all the requirements of railway brakes, and render them practically perfect. The next question which demands our attention is what retarding power is necessary to be applied in ordinary weather to a train of a given weight, moving at the speed of sixty miles per hour (88 feet per second), that it may be brought to a state of rest in 220 yards? The author's object in making the following simple calculations is to show hereafter by comparison how far theory in this case agrees with practice—an important consideration, and a course which he suggests should always, if possible, be followed in papers of this kind. Let us suppose the train to consist of engine and tender weighing, say, 50 tons, and ten carriages, weighing when full, on an average, say 10 tons each, thus making a total weight of 150 tons. Now the work accumulated in a moving body is equal to the square of the velocity in feet per second, multiplied by the weight of the body in pounds, and divided by 64·33. Calling, then, the accumulated work x, we have

$$x = \frac{88^2 \times 336{,}000}{64 \cdot 33} = 40{,}445{,}340 \text{ foot pounds.}$$

When the train stops, the work of friction will equal the accumulated work, and as this is to be the case when 660 feet have been passed over, after shutting off steam and applying the brakes we have—calling y the coefficient of friction $y \times 660 =$ 40,445,340, or $y = \frac{40{,}445{,}340}{660} = 61{,}280$ lbs. = say 27 tons = 18 per cent. of the whole weight of the train, and being the total amount of resistance made up of that due to the atmosphere, &c., and brakes. But the coefficient of friction for wrought iron or steel tires on the rails, in ordinary weather, and when the wheels are skidded, is also about 18 per cent. of the weight of the train; it therefore follows that the retarding force required to stop a train moving at a velocity of sixty miles per hour is equal to the utmost we can obtain by means of friction, without resorting to sand or other artificial means for increasing the adhesion of the wheels.

The next step in the calculation is to ascertain the time occupied by the train in passing over the 660 feet (see Table A appended)—

in this case we have: $\frac{60}{2} = 30$ miles per hour = mean velocity = 44 feet per second $\therefore \frac{660}{44} = 15$ seconds = time.

If we disregard the resistance due to the atmosphere, as it will not amount to more than 3 per cent. in this case, and even less

for lower velocities, and distribute the retarding force of 27 tons throughout engine, tender, and carriages in the ratio required by Condition 4, we get:—Weight of engine and tender = 50 tons; retarding force = 18 per cent. = 9 tons; weight of carriages, 100 tons; retarding force = 18 per cent. = 18 tons. If we divide the 9 tons for engine and tender over the driving and trailing wheels of the former and the four wheels of the latter, we have 1·12 ton or 1 ton 280 lbs. for each, and treating the carriages in a similar manner by dividing the 18 tons over the forty wheels, we have:—·45 of a ton, or 1008 lbs. for each.

The above retarding forces of 1·12 ton and ·45 ton for each wheel of tender and carriages respectively, if obtained by means of friction generated by pressing blocks of cast iron or wood on the tires of the wheels, will be, as you are aware, but a small fraction of the pressure actually put upon them, and will vary—with the latter substance especially—considerably with the state of the weather. It is therefore of great importance that the material forming the blocks should not only be economical, durable, and act with the least amount of injury to the tires, but that it should also give as high a fraction of the force applied as possible. This fraction, or coefficient of friction, for various substances has not been ascertained for the particular purpose now under consideration to the extent its importance demands, and the author would therefore suggest that a series of experiments of the kind required are specially of that character which renders it desirable they should be made under the auspices of this Society or one of a kindred nature.

The author believes, however, he has consulted the best authorities extant, including General Morin, Rennie, Rankine, &c., and has appended a table (C) comprising the friction of those surfaces which seem to him most useful.

From the table it will be seen that we may safely take the average coefficient of friction for wrought iron or steel tires on the rails at ·18, of cast-iron blocks on the tires at ·20, and wooden blocks on the tires ·25 of the pressure applied. It therefore follows that to obtain a retarding force of 1008 lbs. to each carriage wheel, so as to stop the train in 220 yards, we must apply a pressure of $\frac{1008}{\cdot 20} = 5040$ lbs. = 2·25 tons, to the cast-iron block, or one of 4032 lbs. = 1·80 ton to a wooden block. It is, however, questionable whether the slight average superiority of bite given by the wood block is sufficient to counterbalance such advantages of a cast-iron one as the friction being more constant, and therefore requiring less judgment and experience on the part of the man applying the brakes; higher in wet and foggy weather, when the brakes are most needed; its durability and economy.

The fact, too, of cast-iron blocks becoming extensively adopted on the Continent is additional evidence of their superiority, as we may fairly suppose that iron would not be used there in preference to wood unless found to be generally more suitable. The question of the friction being constant is in the author's opinion of great importance, because continuous brakes without it require such careful handling to prevent skidding the wheels, a step which should only be resorted to in a case of emergency, as doing so not only wears flat places in the tires, and promotes the destruction of the rails, but is attended with so much vibration as to become an intolerable nuisance to travellers, and even, as we are told by the medical profession, conducive to disease. Hence the necessity of the brake apparatus permitting the driver or guard to regulate the pressure applied to the blocks according to the requirements of the weather and the weight and velocity of the train; and as a guide to them to some extent the author would suggest the use of an indicator showing the speed of the train in miles per hour.

The next question the author would advance for discussion is the best means of applying the brakes so as to prevent the chuck caused by the telescoping of the buffers when a quick stop is made. In his opinion this can only be completely obtained by an efficient continuous brake, that is, one capable of applying the necessary retarding power to the engine, tender, and each carriage simultaneously, so that if it were possible for us to uncouple them at the same moment as the brakes are applied each would travel an equal distance if left to itself entirely.

The author believes some engineers advocate applying the brake power from the trail end of the train first, but he cannot see how this would get rid of the difficulty, as the action would be simply reversed, and accompanied by the disadvantage of a sudden tensional strain on the couplings, &c. Others advocate applying the brakes to the leading, trailing, and centre carriages simultaneously, as in the Heberlein brake; this must undoubtedly lessen the shock to a very considerable extent, but it is obvious that it will not be done so entirely as if applied in the same way to the intervening carriages also, that is, to the whole train, as in the case of a continuous brake. The author, before concluding this part of his paper, would draw the attention of the meeting to Table D, showing the result of his observations as to the pressure necessary to be applied to wooden blocks to stop a train of a given weight in various distances and different kinds of weat[illegible] it will be found, if carefully compared with the th[illegible] Tables A and B, to bear out their accuracy to a c[illegible]e extent. The experiments were carried out on the [illegible]n the Epping and Theydon stations, on a branch of

the Great Eastern Railway. The pressures on each wheel are worked out from those recorded by the pressure gauge attached to the hydraulic brake in use on this line, and which, from the inelastic nature of water, is peculiarly well adapted for the purpose of experiment.

The author believes he has now laid before the Society the principal conditions necessary to be observed in designing a continuous brake, and now proposes to describe the chain, hydraulic, atmospheric, and electric brakes. Before doing so, however, he would observe that he has selected these brakes as showing the peculiarities and advantages attending the transmission of power by such widely different means as air, water, and electricity, rather than give an account of a number of mechanical brakes already too well known to need description.

Of all the continuous brakes which have been tried in this country, one of the longest in use is that commonly known as Clark's chain brake, it having been in operation on the North London and other railways for about nine years, and during that time has received several modifications and improvements, which have at last culminated in the simple, ingenious and in many respects efficient brake illustrated in plan and elevation in Plate I., which explains the arrangement for each carriage and the guard's van, the former being fitted with a combination of levers, which are caused to press the blocks on to the tires throughout five or six carriages of the train, by making the chain passing over the pulleys continuous, and exerting a pressure upon it by the arrangement shown attached to the guard's van. The action of the brake is as follows:—By raising the lever A in the van (Fig. 1 annexed) the friction wheel B, on the drum, is brought into contact with the wheel C, fastened on an axle of the van in two halves with a pressure in proportion to the height the lever is lifted, and to the number of times it is multiplied by the levers A and A^1. The motion thus given to the friction wheel by C winds up the chain (the opposite end of which is fastened to the headstock of the last carriage) on the drum to which the wheel is attached. Now it is obvious that any motion tending to put the chain in tension will also tend to raise the weighted levers D under each carriage, and also whatever pressure is put upon the chain will be applied to each lever in an increased ratio, for the reason that the multiplication of the pressure obtained is compensated for by the extra amount of slack we have to wind up before the brake blocks can be got into action. The movement of the lever D communicates motion by means of the links E and friction plates or levers F of the ratchets to the rocking shaft G, which is hung at each end from the framing of the carriage, and being free to oscillate, ensures an equal pressure on

each block. The ingenious ratchet arrangement to compensate for the wear of the blocks, and so keep them always a set distance

Fig. 1.

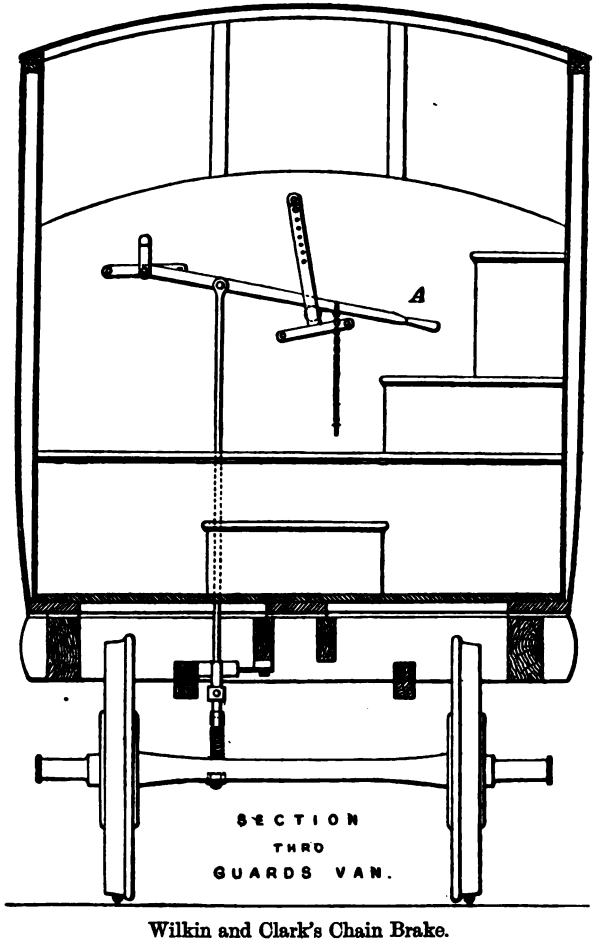

Wilkin and Clark's Chain Brake.

from the tires, is a special feature of this brake; it is shown by the engraving at Fig. 2, and acts as follows:—The plates F and F^1 have india-rubber disks H interposed between them and the nuts and heads of the bolts which connect their extremities; the bolt at one end passes through a slot, allowing one inch clearance in the rod J hung from the framing of the carriage. The force the rubber disks press the plates F^1 on the rim of

the ratchet is greater than that exerted on F, so that when the wear of the blocks requires the movement of the bolt to exceed

FIG. 2.

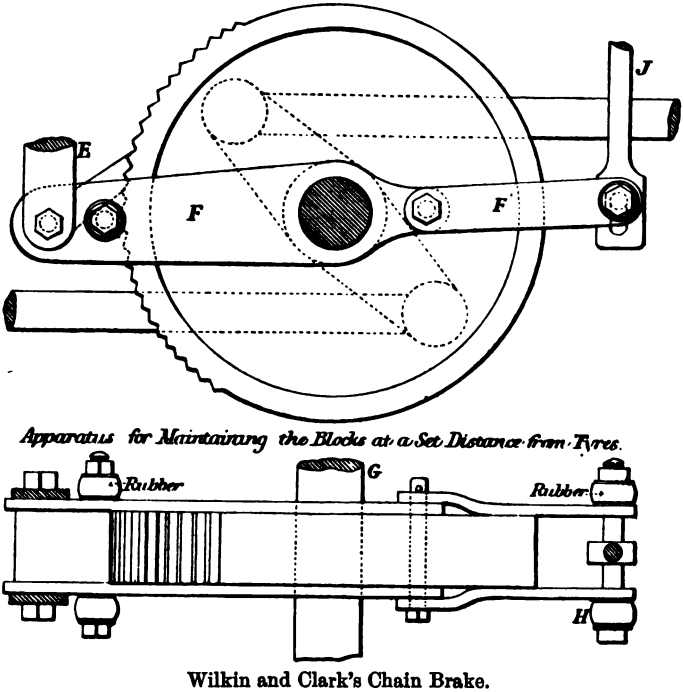

Wilkin and Clark's Chain Brake.

the length allowed by the slot in the rod J, the ratchet slips the required distance and is held in its new position by the rubber disks at the extremity of F^1, until F has dropped and the pawl taken up a fresh tooth. It will readily be seen that the action of taking up the tooth is to bring the double-headed lever into a more vertical position, and so advance the blocks the exact distance necessary to compensate for their wear. All that is required in order to take the blocks off the tires is to lower the lever A in the guard's van, when the levers D, which are loaded at their extremity with cast-iron disks weighing 50 lbs., return to their normal position.

To illustrate the action of the brake more completely, let us assume the guard to exert a force of 56 lbs. at the end of the lever A; this force will be multiplied by the lever under the van, so as to put a pressure on the friction wheels twenty-four times 56 lbs., or 12 cwt. Taking the coefficient of friction at one-sixth and

comparing the diameter of the wheel B with the effective diameter of drum when the chain is wound up (4 to 1), we get tension on chain $= \frac{12 \times 4}{6} = 8$ cwt. Now, as the chain moves 7 in. for every 5 in. the weighted lever D is raised, it follows that the effective force applied to each lever D will be $\frac{8 \times 7}{5} - 50$ lbs. for the weight = say $10\frac{3}{4}$ cwt.; and as the motion of D is ten times that of the block, it follows that the total pressure applied to the blocks will be $10\frac{3}{4} \times 10 = 107\frac{1}{2}$ cwt., or say 5 tons 8 cwt.; this pressure with the coefficients of friction for wood to suit all weathers ·20, ·25, ·30, ·35, would give retarding forces of 10·7, 13·4, 16, and 18·7 per cent. respectively of a carriage weighing 10 tons. It will be remembered that at the commencement of this paper the author suggests as a starting point that the brake should be capable of exerting sufficient power to stop a carriage moving sixty miles per hour in 220 yards; that 18 per cent. of its weight applied as a retarding force is sufficient to do this; and that the coefficient of friction for wood should be taken at ·25, so as to allow for variation in the weather. Looking at the power of the brake from this point of view, it is evident that the guard in a case of emergency could apply the maximum amount of retarding force to each carriage of a short train by exerting a slightly increased pressure on the levers connected with the friction wheel. By reversing the arrangement of the levers and weights and winding up the chain in the guard's van a self-acting brake is obtained if the train should divide ascending an incline as the weights drop and apply the brakes automatically. The objections, however, to the guard having to wind up the slack of the chain in a train of five or six carriages after every stop, and having, moreover, no power to regulate the pressure on the blocks according to the weather, are sufficiently obvious, and certainly more than counterbalance the advantage got by this arrangement.

Having described the action of the chain brake, let us now consider how far it complies with the conditions that a continuous brake should fulfil:—(1) The engine driver has not charge of the brake, and as the apparatus illustrated would require an exertion of power varying from 25 lbs. to 70 lbs. on the part of the man applying it, the author considers it would have to be amended, especially if metal blocks be used, before being placed in the hands of the driver. (2) A careful examination of the arrangement illustrated [illegible] ow two difficulties in its application to a train above a [illegible] ngth—one, the increased slack which has to be wound [illegible] a for every additional carriage before the brake

can be got into action; the other, the failure of the weighted lever D farthest from the drum returning to its normal position on account of the resistance due to unwinding the chain over so many pulleys. It is owing to these objections, no doubt, that the inventor specifies its application to extend to six carriages only. (3) The guard has no power over the train beyond six carriages, nor can it be applied with certainty to them from both ends of the train. Neither are the brakes self-acting in case of any part of the train breaking away. (4) Although the brake power can be applied in proportion to the weight and speed of the carriages, no provision is made for its application to the tender and engine. (5) The application of the brake requires comparatively considerable exertion on the part of either guard or driver. (6) If the brakes on one or more carriages become inoperative, the whole arrangement would be rendered useless. (7) Before the blocks act, the train, whatever its speed, must travel twenty-five yards after the guard has raised the lever; the arrangement has the advantage, however, of allowing the pressure on the blocks to be increased or decreased at pleasure. (8) The brake will not allow of any of the carriages to which it is applied being slipped. (9) The brake has the advantage of allowing the carriages to be coupled indiscriminately. (10) The brake is extremely simple, and does not require particular care on the part of railway servants. (11) The application of the brake is attended with the disadvantage of applying pressure on one side of the axle only. (12) The pressure on all the wheels is the same. (13) The brake is not affected by atmospheric changes. It is evident therefore that if the chain brake be applied to a train of six carriages only, it presents, from its simplicity, many features to recommend it; but if the length of the train be considerably increased, its simplicity and efficiency is lost in nearly the same proportion.

Barker's hydraulic brake has been working successfully for a period of six months on a branch of the Great Eastern Railway between London and Epping, and for a period of eighteen months on another branch of the same railway between Stratford and Victoria Park. It is illustrated in plan and elevation in Plate II., and in detail in Figs. 3, 4, 5, 6, and 7 of the engravings. The apparatus for convenience of description may be divided into three parts: (1) The pump, cistern, and accumulator for collecting and storing the power. (2) The regulator. (3) The distribution of the power to the wheels of the carriages to retard the motion of the train. The pump A (Fig. 4) is double acting, and worked by an eccentric on a shaft, to one end of which is attached a friction wheel that is brought into contact with a wheel of the van automatically. The work of the pump is to take water from the cistern B, which holds about

FIG. 3.

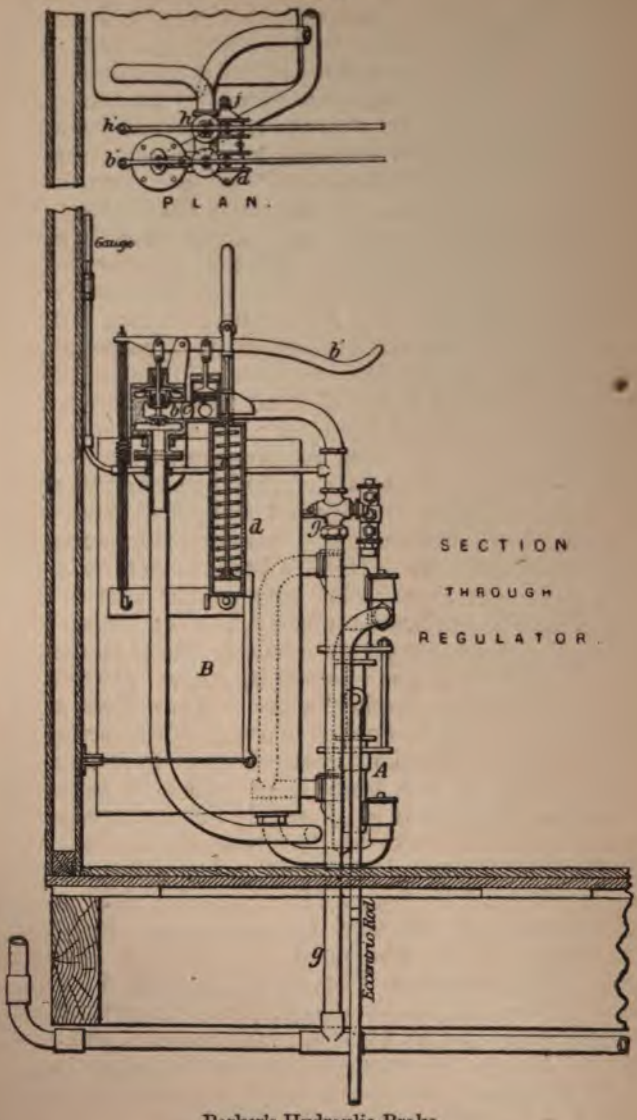

Barker's Hydraulic Brake.

twenty-five g and raise the piston in the accumulator C (Fig. 7), the d of which is attached to the cross head D, connecting rods E, fixed to the spring plates F. The

tension rods of the springs G, H, pass through the plate F, and are connected with the plate J of the springs K, L. A consideration of this arrangement will show that whatever pressure is put on the plate F by the connecting rod is transmitted through the springs G, H, to the plate J, so that the tension of the four springs G, H, K, L, will be equal to double the power applied through the rod E; but as we cannot gain power without a corresponding loss of motion, it follows that each pair of springs will travel only one-

Fig. 4.

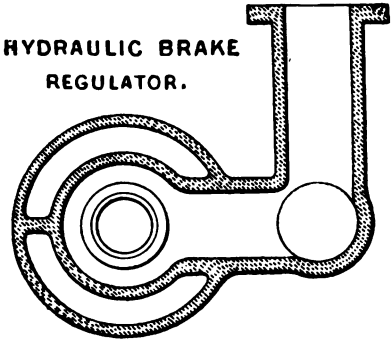

Fig. 5.

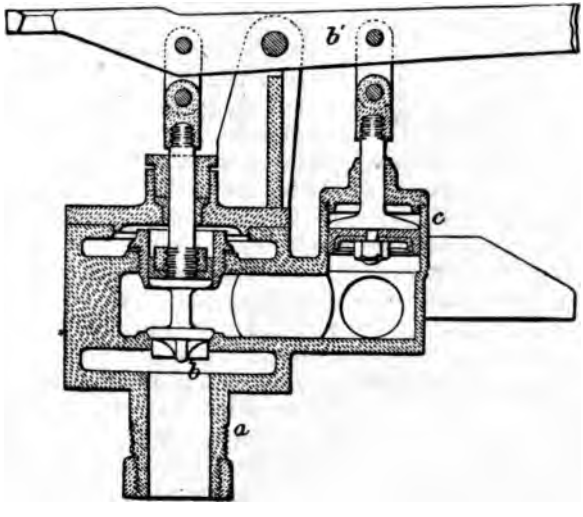

half the distance of E, and consequently of the piston. This arrangement of the springs is designed to get length of stroke, as to have done so in the ordinary way would have required them to be of greater length than the limited height of the carriage roof would allow. It should be mentioned that the springs are in duplicate on each side of the cylinder, as indicated in Fig. 7, and that their maximum tension is equal to 12 tons, or a pressure on the piston of 280 lbs. per square inch, the piston being

11 in. in diameter and stroke 1 ft. 6 in. The piston therefore, on being raised from its normal position to the top of its stroke, is subject to a gradually increasing pressure, and the reverse of this on returning and applying the power stored in the springs as a retarding force to the motion of the train. It is therefore obvious that without some arrangement we should have a power exerted against the motion of five carriages considerably greater in proportion than for ten carriages, and so on as the length of the train increased until the whole of the water in the accumulator had been forced out by the springs, when the effect would be *nil*. To render, therefore, the action of the accumulator as nearly constant as possible, whatever the length of the train, the following contrivance is introduced. A rod M passes into the cylinder through its cover, a distance corresponding with a depth of water sufficient to supply the brakes of about twelve carriages, and with pressure high enough to stop them as quickly as possible when moving at a maximum velocity. A stud N passes through the rod just above the cover. The three-way cock is shown provided with branches to the cistern, accumulator, and a cylinder fixed under the floor of the van, the piston rod of which is connected to the link supporting the swinging end of the friction wheel shaft. The plug of the cock is made sufficiently long to carry the balance weight and disk at its end to catch the trigger, supported by a bracket bolted to the top of the cylinder. The action of this arrangement is as follows:—When the rod M is at the bottom of its stroke the passage in the pipe from the cylinder under the van to the cistern, is open, and the friction wheel being forced into contact by a powerful spring, water is pumped into the accumulator. The rod is then raised by the piston, and the wiper of the balance weight follows the stud until the disk catches the trigger, and the motion of the weight is stopped. On the piston reaching the top of its stroke the stud lifts the trigger and releases the weight, which in its fall opens the communication between the disconnecting cylinder and accumulator, and so stopping the pump by forcing the friction wheel from cont[illegible] The arrangement is therefore automatic, and ensures

Fig. 6.

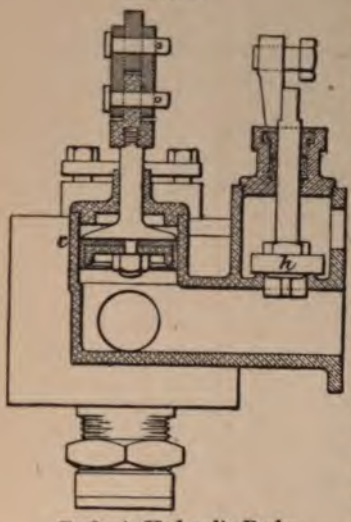

Barker's Hydraulic Brake.

FIG. 7.

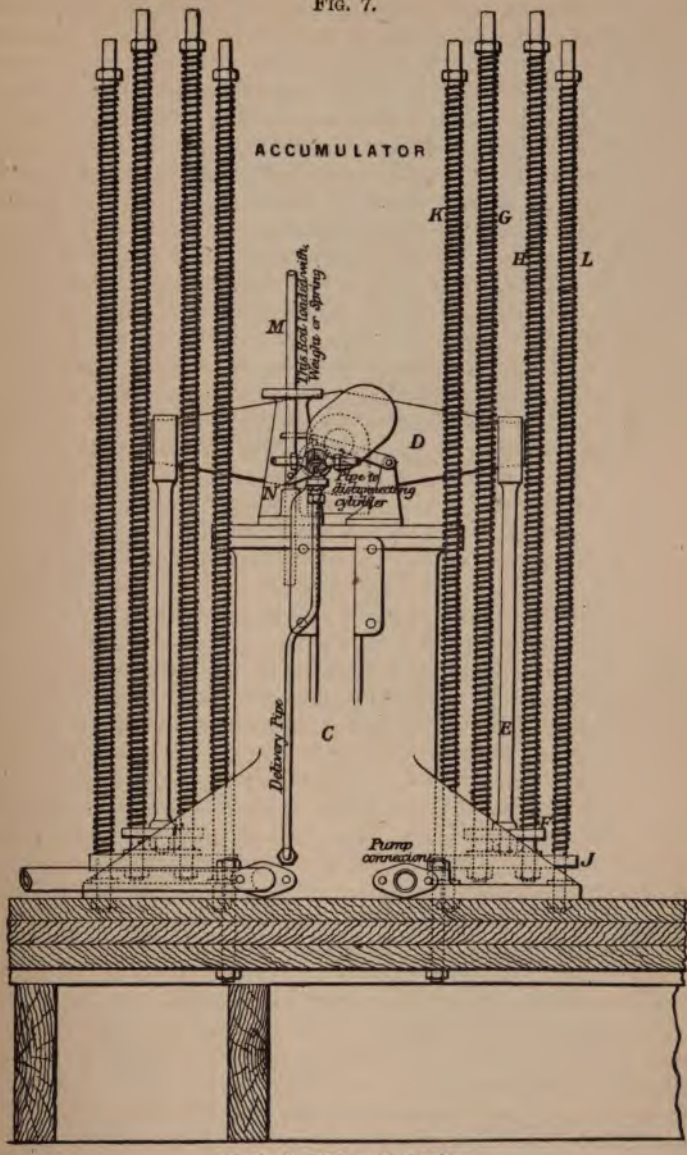

Barker's Hydraulic Brake.

always a pressure in the accumulator sufficiently high for almost any emergency. We now come to the regulator, which is designed to control the passage of the water under pressure to the pipes

fitted to the carriages composing the train. It is shown in section in Figs. 3 and 4, and its position relative to the rest of the apparatus in the van is shown in Plate II.

Referring to Figs. 3, 4, and 5, *a* is the pipe from the accumulator, *b* a partially equilibrium valve, closed tight by the tension of the spring at the end of the lever b^1; the stem of the valve passes through the valve case and is connected to the lever b^1. *c* is a piston packed with cup leather, the rod of which passes through the cover of its cylinder, and is connected to the opposite arm of the lever b^1, the fulcrum of the lever being carried by a bracket fixed to the valve case between the stem of the valve and piston rod, so that any pressure tending to raise the piston will also tend to close the valve. *d* is a case turning on a pin at its lower end, and containing a spring *e*, used for compactness instead of a weight, one end of which presses against the top of the case, and the other against a disk attached to the rod *f*, passing through the cover of the case, and joined to the handle and roller traversing the lever b^1. The tension of the spring when the handle and roller are in their normal position is taken by the catch cast on the small cylinder containing the piston *c*. If then the handle and spring case be moved from the fulcrum the spring is brought into action on the lever b^1, and raises the valve, allowing the water to flow from the accumulator into the main pipe *g*, until the pressure in it is sufficient to raise the piston and close the valve. Now it is obvious that the farther we move the spring from the fulcrum the greater must be the pressure acting on the piston to close the valve. It therefore follows that by this ingenious arrangement we may regulate the pressure of the water passing to the main pipe *g* to anything we please, and limited only in its amount by the pressure in the accumulator. To permit the pressure in the main pipe *g* being diminished after the water from the accumulator has been admitted to it through the arrangement just described, or to release the brake blocks from the tires, a valve *h* is provided, seated in a case cast in one with the equilibrium valve case and cylinder. The stem of this valve is connected to the lever h^1, which is provided with a spring and case *j*, cast in one with and similar in every respect to *d*, as shown by the plan of regulator (Fig. 4), so that when *d* is moved and water under pressure admitted to the pipe *g*, *j* is moved also, and the tension of the spring contained in it acting on the lever h^1 gives the required resistance to keep the valve *h* shut.

To decrease the pressure thus established in *g* we have only to move the springs nearer the fulcra of the levers when the equilibrium valve being shut and the pressure of the spring on valve *h* diminished, it will open and allow sufficient water to return by the pipe *k* to the cistern, so as to establish the proper pressure

incidental to the distance from the fulcra at which the springs exert their tension on the levers b^1 h^1, and it follows that if we relieve the levers entirely of the force of the springs by returning them to their normal position the whole pressure in g will be reduced and brake blocks released by the return of the water to the cistern. We now come to the means provided for distributing and applying the power stored in the springs as a retarding force to the motion of the train. Each carriage is provided with a pipe $1\frac{1}{4}$ inch in diameter fixed to the underside of the framing, and made continuous, when the carriages are coupled together by strong flexible tubing connected to the pipes with ordinary unions, so that the pipe g from the regulator is made to extend throughout the whole length of the train. On this main pipe and at each end of the carriage is fitted a stop cock, to prevent the water flowing out on coupling and uncoupling. The plug of the cock is provided with a handle, which is connected with the handle of the opposite cock of the next carriage by a cord, so that if the train breaks away at any part the cord coming into tension will close the cocks, and thus prevent the brake apparatus on the accumulator end of the train being put out of action. Branch pipes, as shown, lead from the main pipe to the hydraulic cylinder 4 in. in diameter provided to each wheel, to which the brake blocks are applied; and it is here that we arrive at the great speciality of this invention. Two blocks are provided for each wheel, and the ram of the cylinder fixed to the nearest block, while the cylinder itself is connected by a pair of rods to the block on the opposite side of the wheel. If water then be admitted from the accumulator the blocks are forced on the wheel, and it is obvious with the same pressure, so that the forces on each side are in equilibrium, and no strain therefore is thrown upon the axle. Another advantage gained here is that the pressure on the two blocks is just double that exerted by the ram, because each of the former move only one-half the distance of the latter, so that if the blocks are applied to the wheels on one side of a carriage only we may consider the pressure in the cylinder as being that exerted to retard the motion of each of the four wheels. If the blocks also wear unevenly it is of no consequence, because the travel of the cylinder itself compensates for any extra distance one block may have to move farther than another, and it is evident that the arrangement ensures all the blocks coming into action at the same time, and is therefore free from any jerk due to telescoping. Each cylinder is provided with a spring, so that when the ram is released from the pressure in the accumulator the tension of the spring forces the water back into the cistern for further use, and keeps the brake blocks clear of the wheels; the amount of clearance of each block thus allowed to take place is regulated by means of a rod fixed at one

end to the axle guard and at the other to the brake block hanger in such manner as to allow the distance between the hanger and the wheel to be shortened by means of a nut.* Each of the branch pipes above mentioned is provided with a stop cock, so as to isolate any disabled brake gear.

Having described the working of the brake, let us examine the amount of retarding force it is capable of exerting to the motion of the train. If we take $\frac{3}{4}$ inch as the travel of the blocks, we shall have the quantity of water used per cylinder, the diameter being 4 inches, $4^2 \times 7854 \times 1\frac{1}{2}$ = say 19 cubic inches $\therefore$ quantity per train of ten carriages $= 19 \times 2 \times 10 = 380$ cubic inches $= 1 \cdot 35$ gallons. The accumulator being 11 inches diameter, and 1 foot 6 inches stroke, we have for every inch in depth $11^2 \times 7858 = 95$ cubic inches, $\therefore$ depth of water taken from the accumulator to supply the cylinders $= \frac{380}{95} = 4$ inches. The length of stroke being 1 foot 9 inches, and maximum pressure 280 lbs., we have the pressure at end of 4 inches $= 280 - \frac{\frac{280}{18}}{4} =$ say 220 lbs. per square inch, but as the pump is put into action by the descent of the piston 4 inches the average pressure is raised to 260 lbs. per square inch $\therefore$ pressure applied to each carriage $= 4^2 \times 7854 \times 260 \times 4 = 13{,}000$ lbs. = say 6 tons = maximum retarding force applied to blocks.

But the coefficient of friction for wood on iron in wet weather is taken at ·25, and requires a pressure on the blocks of 7·20 tons for a carriage weighing 10 tons, and in dry weather taken at ·35 requires about 5 tons. We therefore find that in favourable weather Mr. Barker's brake, as at present designed, has ample power to stop a train of ten carriages weighing 10 tons each, and moving at a velocity of 60 miles per hour in a distance of 220 yards on the level, and that in wet weather the distance would be increased in the ratio of 6 to 7·20, or about 264 yards.

Our next consideration is to point out how far the hydraulic brake agrees with the conditions:—(1) The engine driver does not work the brakes as at present arranged. A line, however, is provided by which he can apply them in a case of emergency.† (2) The brakes can be applied to every carriage comprising a train of reasonable length. (3) The brakes are not applied from the

* Since the reading of the paper an ingenious and extremely simple arrangement has been designed by Mr. Barker for taking up the wear of the blocks automatically.

† The apparatus is now fitted on the engine and applied by the driver throughout the [illegible] in in the most complete manner. It is also proposed to have $3\frac{1}{4}$" [illegible] wheel, if required, so as to meet the objection to torsional strain [illegible]

tail end of the train as well as from the leading van, neither is the brake self-acting. (4) This condition is fully complied with. (5) Practically no exertion is required in applying the brakes. (6) The brakes are not rendered inoperative if the secondary branches, cylinders, &c., fail; but in the case of a main pipe or the leading branch bursting the whole apparatus is rendered useless, with the exception of the guard's van, which is worked by an independent pipe from the accumulator, the train being shut off by turning the cock g^1. (7) The pressure on the whole of the blocks is applied in about $1\frac{1}{2}$ second, obtained from the following formula :—

$$W = 4 \cdot 72 \frac{\sqrt{D^5}}{\sqrt{\frac{L}{H}}}$$

D = diameter of pipe.
H = head of water in feet.
L = length of pipe in feet.
W = cubic feet of water discharge per minute.

Average pressure = 250 lbs. = column of 600 feet of water.

Mean length of pipe for ten carriages $= \frac{400}{2} = 200$ feet.

Pipe, $1\frac{1}{4}$ inch diameter, but to allow for cocks and bends, &c., say 1 inch diameter.

$$\therefore W = 4 \cdot 72 \frac{\sqrt{1^5}}{\sqrt{\frac{200}{600}}} = 4 \cdot 72 \times 1 \cdot 75 = 8\tfrac{1}{4} \text{ cubic feet}$$

per minute = say 52 gallons per minute. But maximum quantity required for train of ten carriages = 1·35 gallon * ∴ time required for this amount to pass through the pipes and act on the blocks $= \frac{1 \cdot 35 \times 60}{52}$ = say $1\frac{1}{2}$ seconds. Distance travelled in one second at 60 miles per hour = 88 feet ∴ Total distance $= 88 \times 1\frac{1}{2} = 44$ yards. The train must therefore travel, when moving 60 miles per hour, 44 yards before any retardation takes place. The pressure is capable of being regulated to anything required below the maximum in the accumulator, but not by the driver. (8) The brake cannot be applied to any carriages requiring to be slipped. (9) The coupling of the carriages indiscriminately does not affect the working of the brake. (10) The apparatus fitted to carriages is extremely simple and light. In the guard's van, however, the apparatus is much more complicated. (11) The pressure on each side of the axle is in

* Instead of 1·35 gallon we shall have quantity of water required for the $3\frac{1}{4}$" cylinders to every wheel and those fitted on engine and tender 1·80 gallon; the pressure will therefore be applied to the whole of the blocks in 2 seconds, instead of $1\frac{1}{2}$ second.

equilibrium. (12) The blocks are applied to the wheels on one side of the carriage only, so that a torsional strain is thrown upon the axle amounting to about half a ton applied to the circumference of the wheel. The diameter of a shaft required to resist this strain $= \sqrt[3]{\frac{1120 \times 20 \text{ inches}}{1700}}$ = say $2\frac{3}{8}$ inches but least diameter of axle = 4 inch, and as the strength to resist torsional strain increases as the cubes of the diameters, we have ratio as 13·20 : 64, or nearly five times greater than is absolutely required, or about $\frac{1}{40}$ of the breaking strain. Elasticity is provided to a very slight extent only by the rubber tubing. (13) In the author's opinion the most important objection to this brake is the liability of its action to become suspended in very cold weather, although no failure of the kind is believed to have occurred at present. But to give this important point due consideration, it is necessary we should imagine for a moment the brake to be extensively adopted. If we do this it is difficult to conceive it to stand the test of intensely cold weather without involving a considerable amount of attention and care. This objection no doubt may be overcome to some extent by employing a weak solution of salt or alcohol during the winter months, but the corrosive action that would be then set up, especially when in contact with such metals as copper, brass, cast and wrought iron, would, it is thought, tend to shorten the life of the apparatus by rendering it less capable of withstanding the high pressure at which it is worked. In concluding his description of the hydraulic brake the author would add that it appears to him to be one which meets many of the most important requirements of continuous railway brakes, more especially with reference to the simple and efficient action of the arrangement attached for applying retarding power to the motion of each carriage, a point, in the author's opinion, of great importance in considering the application of brake power to goods as well as passenger traffic.

TABLE A.

TABLE showing DISTANCE travelled by a MOVING TRAIN on the LEVEL at Velocities of 20, 30, 40, 50, and 60 miles per hour after shutting off Steam, and applying —by means of continuous brakes—a retarding force equal to 18 per cent. of the weight of the Train.

Speed per hour in miles.	Speed per second in feet.	Distance travelled after Steam is shut off, in feet.	Distance travelled after Steam is shut off, in yards.	Time required to stop Train, in seconds.
20	$29\frac{1}{3}$	$73\frac{1}{3}$	$24\frac{1}{2}$	5
30	44	165	55	$7\frac{1}{2}$
	$58\frac{2}{3}$	$293\frac{1}{3}$	98	10
	$73\frac{1}{3}$	460	153	$12\frac{1}{2}$
	88	660	220	15

TABLE B.

TABLE showing PRESSURE to be APPLIED in LBS. to BRAKE BLOCKS for COEFFICIENTS of FRICTION varying from ·15 to ·35, so as to give a retarding force to each wheel of a carriage weighing 10 tons, sufficient to stop it in 220 yards when moving at Velocities of 20, 30, 40, 45, 50, 55, and 60 miles per hour.

Velocity in miles per hour.	Velocity in feet per second.	Coefficient of Friction.				
		·15	·20	·25	·30	·35
20	29⅓	746	560	448	373	320
30	44	1680	1260	1008	840	720
40	58⅔	2987	2240	1792	1493	1280
45	66	3774	2830	2264	1887	1617
50	73⅓	4666	3500	2800	2333	2000
55	80⅔	5646	4235	3388	2823	2420
60	88	6720	5040	4040	3360	2880

TABLE C.

Nature of Surfaces in Contact.	Coefficient of Friction.	Limiting Angle of Resistance.	Authority.
		0° 1′	
1. Polished steel on polished wood	·25	14° 2′	Ferguson.
2. Metals on oak—dry	·50 to ·60	26½° to 31°	Rankine.
" " wet	·24 " ·26	13½° " 14½°	"
" " greasy	·20	11½°	"
3. Metals on elm—dry	·20 to ·25	11½° to 14°	"
4. Metals on metals—dry	·15 " ·20	8½° to 11½°	"
" " wet and clean	·30	16½°	"
" " greasy	·14	8°	"
5. Leather on metals—dry	·56	29½°	"
" " wet	·36	20°	"
" " greasy ..	·23	13°	"
6. Steel on ice	·014	0° 49′	Rennie.
7. Brass on steel	·14	7° 54′	"
8. Soft steel on soft steel	·146	8° 18′	"
9. Cast iron on steel	·15	8° 36′	"
10. Wrought iron on wrought iron ..	·16	9° 5′	"
11. Tin on wrought iron	·18	10° 15′	"
12. Soft steel on wrought iron ..	·19	10° 43′	"
13. Cast iron on cast iron—wet ..	·314	17° 0′	Morin.

NOTE.—Those coefficients in the above Table ascribed to Professor Rankine have been taken from his work on 'Civil Engineering,' and are founded on the experiments of General Morin and others. Those ascribed to Mr. Rennie were made under pressure of 36 lbs. to the square inch.

TABLE D.

OBSERVATIONS made on the GREAT EASTERN RAILWAY between EPPING and THEYDON BOIS STATIONS as to the RETARDING FORCE required to STOP a TRAIN of a given WEIGHT moving at certain VELOCITIES.

Date.	Kind of Weather.	Total Weight of Train, including Passengers.	No. of Carriages, including 2 Vans.	Average Weight of Carriage only.	Weight of Engine and Tender.	No. of Carriages fitted with Brake.	Pressure on Gauge.	Velocity per hour.	Gradient.	Distance travelled after Brake applied.	Equivalent Distance on Level.	Time to stop Train.	Pressure applied to each Wheel of 11 Carriages.	Coefficients of Friction obtained.	Remarks.
		tons.		tons.	tons.		lbs.	miles.	rise.	yds.	yds. (about)	seconds.			
Oct. 23	Very wet	140	13	7¼	44	11	90	45	1–330	440	490	35	1125	·262	Twelve carriages fitted. One disabled.
Nov. 12	Dry ..	140	13	7¼	44	11	110	42	1–330	240	260	20	1375	·352	
„ 13	„ ..	140	13	7¼	44	11	115	42	1–330	230	250	20	1437	·348	
„ 23	Wet ..	140	13	7¼	44	11	90	40	1–330	340	370	34	1125	·275	
„ 26	Dry ..	140	13	7¼	44	11	140	50	1–330	220	250	17	1750	·40	
„ 29	„ ..	140	13	7¼	44	11	150	45	1–330	200	220	19	1875	·35	
„ 30	Greasy	140	13	7¼	44	11	130	45	1–330	400	440	28	1625	·19	

NOTE.—The author has deducted 10 per cent. from the total weight of the train, to compensate for the guard and driver applying their brakes near the end of the distance in which the stops are made; so that the total weight of the train being 140 tons, we have weight retarded by the hydraulic brake fitted to 11 carriages $=140-14=126$ tons, or $\frac{126}{11}$ = to an average say of $11\frac{1}{2}$ tons per carriage. The area of the cylinders attached to the blocks is $12\frac{1}{2}$ in.; but as the pressure upon the wheel is doubled by their action, we may consider the pressure in cylinders as applied to each wheel—two cylinders being fitted to each carriage.

DISCUSSION.

The PRESIDENT observed that so far as Mr. Fox had carried the subject of continuous brakes in his paper it was complete, and he (the President) would therefore only invite discussion on the brakes brought under notice that evening, as Mr. Fox intended to continue the subject in a subsequent paper, which would be devoted to the consideration of atmospheric and electric brakes.

Mr. WILLIAM ADAMS observed that Clark's brake, which had been described in Mr. Fox's paper, had been in use on the North London Railway for some years, and had given great satisfaction; when it was first tried it was found to be a great advance on anything previously attempted. The great principle, which was new at the time, was that of taking advantage of the momentum of the train to cause the retardation. The simple application of friction wheels to the wheels of the carriage enabled a great amount of pressure to be put on the brake with but a small amount of attention on the part of the guard. In England the question of brake power was a very serious one, as the demand was for greater station accommodation; but if the number of stations was to be increased, the companies would not be allowed to add to the time of the performance of the journey. It therefore became a question of brake power. Inventors like Mr. Clark were entitled to great credit, perhaps to more than they would ever have, for it was difficult to appreciate or realize the full value of such inventions as those referred to in the paper. Something possibly occurred on the line, trains might be approaching a danger point, or each other in opposite directions, but by means of a good brake, they were enabled to stop very quickly so as to avert a serious accident, and nothing was ever heard about the matter. No one could know the enormous saving of life and property that might be effected by means of inventions of the kind before the meeting. Mr. Fox had touched upon the requirements of a theoretically perfect brake. With regard to some of the requirements it was very desirable that the driver in cases of emergency should be able to apply the whole of the brake power, and it was equally necessary, in case the driver was not on the look-out, that the guard should be able to apply the whole of the brake power, and a brake was very imperfect if not equally applicable from both ends of the train. If the brake power was applied to the engine to prevent any unpleasant sensations to passengers, every carriage should be made to resist it theoretically. Mr. Fox had said there was a difference of opinion as to applying brake power. The application of the brake to the rear of a

train would throw great strain on the draw gear, and he (Mr. Adams) thought trains fitted up for using great brake power should have special attention given to the buffing and draw gear.

When first using continuous brakes he had the old system of draw and buffer gear, called the non-continuous system. The arrangement was such that when strain was applied through the draw gear the whole of the strain was on the draw springs. Supposing it took a ton to draw the train, and supposing there were twenty carriages in the train, that was 1 cwt. strain to move each carriage along. On the first carriage next to the engine there would be, by that system, 20 cwt. of strain, on the second 19, and so on. The effect with continuous brakes was that an enormous pressure on the draw-springs was produced which caused them to break apart. The system at present in use on the North London line especially was the continuous draw bar system; that was a rigid bar carried through the train, and every carriage was hung on that rod by a spring, so that there was only the strain due to the weight of the carriage upon each spring. He (Mr. Adams) referred to that, as when speaking of the application of the brake it was necessary to recognize the necessity of having everything sound and strong, and that was one of the points; and it seemed to him to remove one of the objections of the brake being applied to the rear. If the brake power was not distributed throughout the train, the rear should have the preference. In Mr. Clark's system the brake was applied by two methods, which were called positive and negative. The positive was the one used by him (Mr. Adams). The guard by turning a wheel tightened a chain, and drew all the brakes on. In the negative or "let-go" brake there was a spring or weight on each carriage which put the brake on when the through chain was slackened in action, and so there was an advantage if the train was severed, as all the brakes were brought into action.

The whole matter resolved itself into the question of, What kind of brake would give the least trouble and be the least expensive in maintenance? Great ingenuity had been shown, and with a little attention he (Mr. Adams) thought they would soon find out the simplest mode of dealing with the question. One great point with regard to brakes was how to get them off. It was simple to put them on, as theoretically there was only the same power required to put on a dozen brakes as one, but to get them off involved the necessity of a number of weights or springs being applied to the several blocks, and that diffi-cu[illegible] been met in Mr. Clark's system, by which the power [illegible] from the centre of the train, and the brake could

be worked from either end of the train by the guard, the friction wheels being in the centre, the chain had only to be drawn half the distance.

He (Mr. Adams) had seen Mr. Barker's brake, which acted exceedingly well. He (Mr. Adams) had noticed among other things that when applied to a train of twelve carriages the blocks came off well. That brake was in its infancy, yet so far it had worked exceedingly well, although it did not comply with all the theoretical requirements.

General CHAPIN said that he considered the power of stopping a train should be in the hands of the man who drove the train, because he best knew how fast the train was going, and the amount of power necessary to stop it. Before the guard in the rear of the train could see over some ten carriages and some 300 or 400 yards ahead and notify the same to the driver, the other engine would be upon them. Therefore he thought the driver should have the power of stopping a train. The system of continuous brakes acting on the principle of giving the engine-driver the whole of the control of the train was in use in the United States, and he conceived that the American system was better than that in use in England or on the Continent. A continuous brake should not only be so simple that a man of ordinary intelligence might understand it, but that no railway official could put it out of order. In America they had the cord system, which acted admirably, and it was the simplest matter to arrange. He had inspected several systems of communication in England, one of which was a bell rope which had to be pulled until the train stopped. He (General Chapin) thought the Westinghouse brake was one of the best for a station brake, and was as near perfection as any human appliance was ever made mechanically, but it was open to objection. The brakes under discussion were very creditable to their inventors. Mr. Clark's brake had been at work for many years, but it was open to one grave objection, its weight, and the fact that if it broke down anywhere it was inoperative until repaired, and it was inoperative from the same reason that most other brakes were. Barker's hydraulic and the Westinghouse brakes developed power on the locomotive, and they could easily be removed if necessary. He considered no brake was a safety brake that did not develop its power on each carriage, so that a carriage might be taken from off the North London line and run on any other line, supposing it to be the same gauge, and it should work equally well on either line. The theory of stopping a train was all very well, but in practice if the retarding force was applied to the wheels properly any train could be stopped. As to the atmospheric and several

other systems that had been tried, they would stop a train as quick as it was necessary to do so, provided they were always in order.

Mr. J. T. KING said that in the main he agreed with the author of the paper as to the requirements or functions which a continuous brake should be capable of performing. He would be prepared to show at a subsequent meeting that there was a brake in existence, and in extensive use too, which complied with those requirements. It appeared to him that maintenance was a question of great importance, and also that when a train separated the coupling parts of the brakes ought not to be injured, but really be left ready to be re-connected without repair or renewal. Those were two requirements which perhaps had not been brought forward with sufficient weight. The question of signalling between passengers and guards had been referred to by one speaker, who stated that in travelling in railway carriages he had seen very few successful cases of signalling. It was the fact, however, that train signalling could be properly effected, and that too by what might be called a continuous brake adjunct. When Mr. Fox came to deal with the other brakes, which would include the Westinghouse Brake, he (Mr. King) would be prepared to offer some further remarks upon the question.

Mr. G. ALLAN said he was glad to find that the question of continuous brakes was seriously engaging attention in England, as they were most important details of railway rolling stock. In the United States the continuous brake was extensively used; there were 20,000 miles of railway running 12,000 carriages and 4000 locomotives fitted up, and therefore, so far as numbers and mileage went, a continuous brake was most popular there. He understood there was an electric brake about to be introduced into England, and that Mr. William Adams was about to fit up a train with it on the North London Railway, which would afford an opportunity of seeing it at work.

Mr. Fox, in replying upon the discussion, said he would endeavour to correct an erroneous impression Mr. King appeared to have formed on one or two points. He (Mr. Fox) advocated that every carriage in a train, whether carrying passengers or goods, should be fitted with a brake capable of being applied by the driver or guard. With regard to some observations which had been made as to signalling, the subject of the paper was Continuous Railway Brakes, and he was not therefore prepared to go into other questions of railway practice. Mr. Adams had referred to the question of first cost, which was a condition that he (Mr. Fox) could not admit should be allowed to over-

ride the promotion of public safety. It was false economy, for everything which most effectually tended to prevent railway accident would also tend in a like degree to prevent the great cost sometimes entailed by railway accidents, and therefore he thought economy would be materially promoted by attaining efficiency of working without undue restrictions being placed on the first cost.

The PRESIDENT, in closing the discussion, observed that efficiency was a most important element in railway working, but at the same time the cost of maintenance was another element that could not be neglected by railway companies. He would not refer further to the subject of the paper, as it would be resumed upon a future occasion, when there would be additional matter for discussion.

THE END.

PRINTED BY WILLIAM CLOWES AND SONS, STAMFORD STREET AND CHARING CROSS.

PLATE 1.

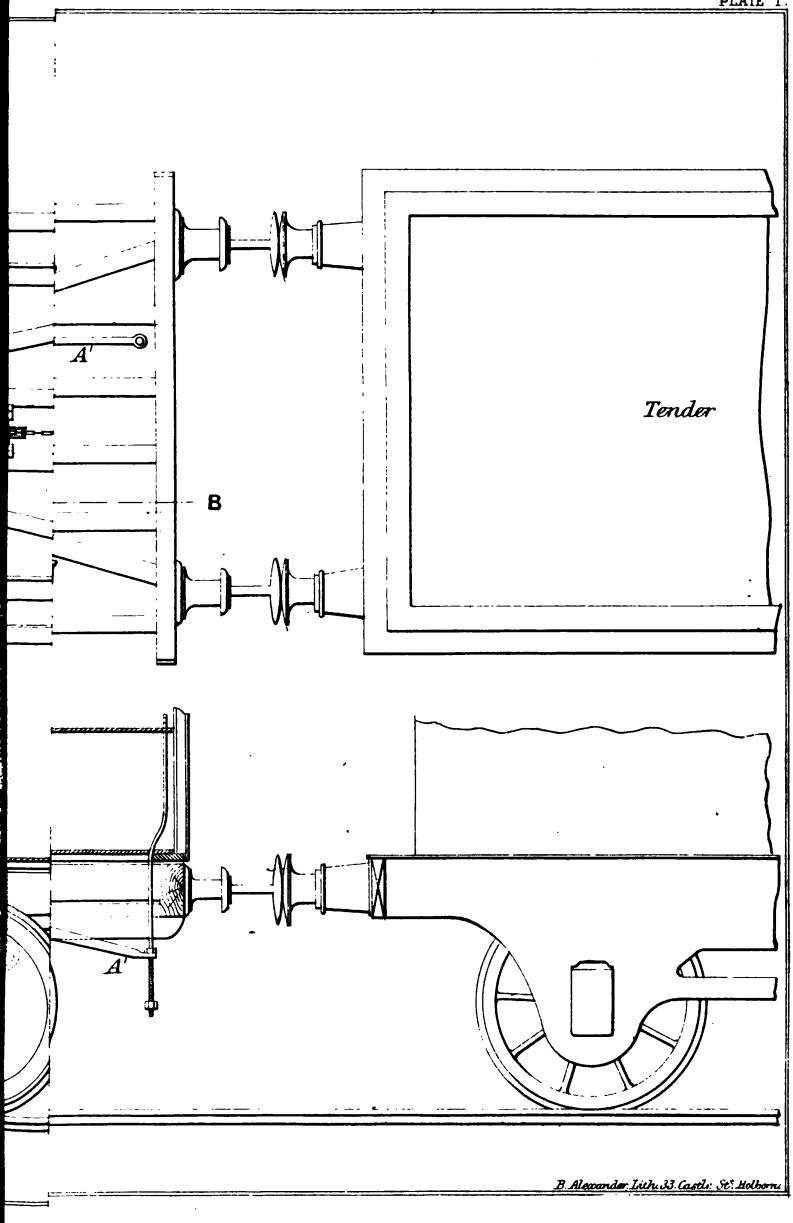

B. Alexander Lith. 33. Castle St. Holborn.

PLATE 2.

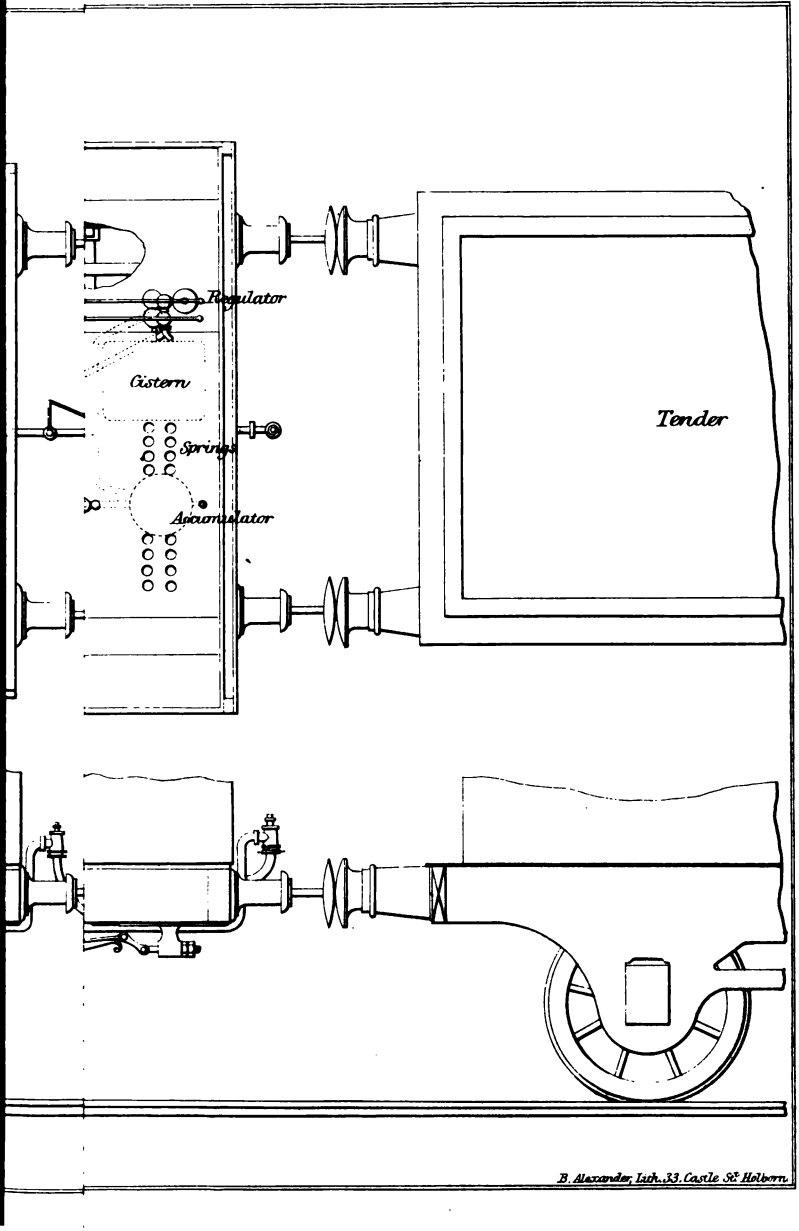

B. Alexander, Lith., 33. Castle St. Holborn.

APR 4 - 1939